NOTES:
1. MOUNTING: Mounts in a ∅.281±.002 [∅7.13mm±.05] panel hole on .375 [9.5mm] centers. Panel thickness .031 [0.8mm] to .125 [3.18mm]. Panel hole should be deburred, but not chamfered.
2. ASSEMBLY: Insert mount through panel hole, slide retainer on back of lens. PCB mounted LEDs slide into lens when the panel cover is closed or the PCB card is inserted into the case.
3. U.S. & Foreign Pat. Issued & Pend.

REVISIONS				
ECN#	REV.	DESCRIPTION	DATE	INITIALS
	1	DELETE .270 DIM.	7-1-00	JS
	2	.200 WAS .205, .310 WAS .300	7-24-01	JS
	3	.240 WAS .232	7-31-01	JS
	001	REVISED PER ECR111009AZ01	6-20-10	SMU

RETAINER
(ORDER SEPARATELY)

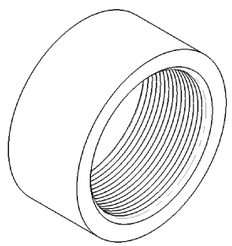

RNG 268

INTERCONNECT
(ORDER SEPARATELY)

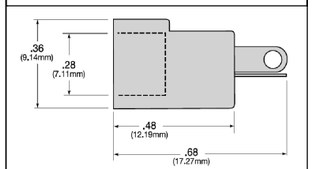

CNX 310

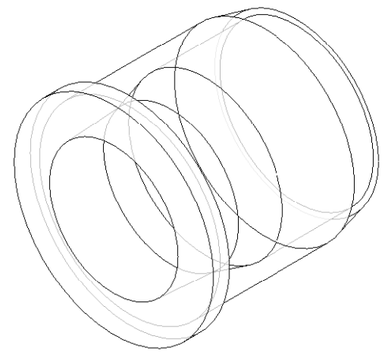

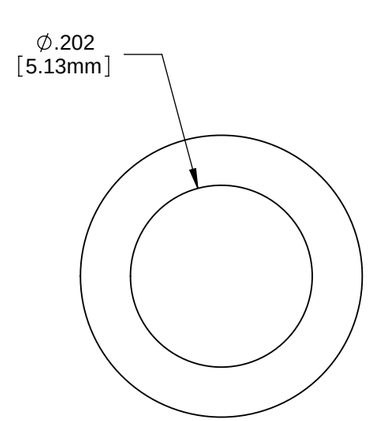

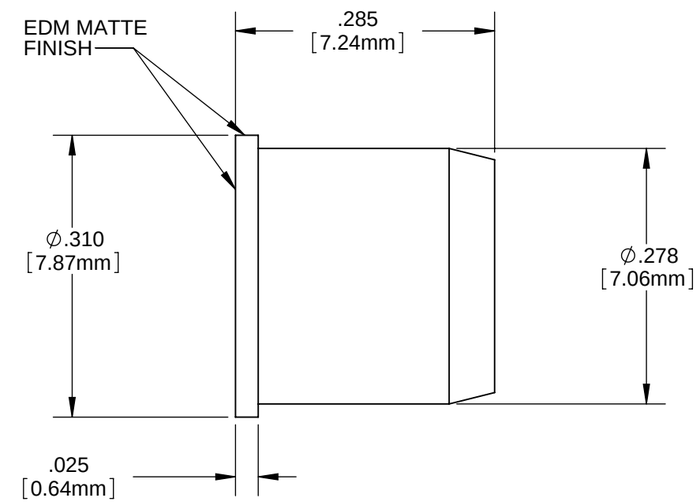

ORDERING CODE : **CMC 285 XXX**

CLIP MOUNT COLOR	
BLK	BLACK
CTP	CLEAR TRANSPARENT

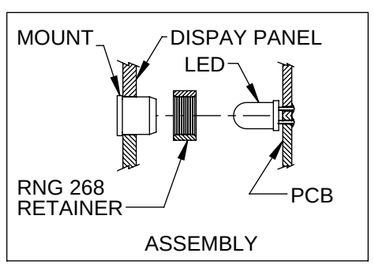

ASSEMBLY

UNLESS OTHERWISE SPECIFIED DIMENSIONS ARE IN INCHES:
ANGLES ±1°
FINISH
DECIMALS .X ±.020 .XX ±.010 .XXX ±.005
BREAK ALL CORNERS AND SHARP EDGES .030 MAX.

THIRD ANGLE PROJECTION

PROPRIETARY AND CONFIDENTIAL
THE INFORMATION CONTAINED IN THIS DRAWING IS THE SOLE PROPERTY OF VISUAL COMMUNICATIONS COMPANY, INC. ANY REPRODUCTION IN PART OR AS A WHOLE WITHOUT THE WRITTEN PERMISSION OF VISUAL COMMUNICATIONS COMPANY, INC IS PROHIBITED.

MATERIAL
POLYCARBONATE , UL 94-V2, BLACK

FINISH

APPROVAL		DATE
DRAWN:	SMU	6-20-10
CHECKED:	DZ	6-20-10

DO NOT SCALE DRAWING

VISUAL COMMUNICATIONS COMPANY, INC.
190 Bosstick Boulevard, Suite101 San Marcos, CA 92069 USA
Phone (760) 560-1300 Fax (760) 560-1301 email vccsales@vcclite.com

TITLE:
CLIPLITE® CMC 285 MOUNT

SIZE	DWG. NO.	REV
B	CMC 285 XXX	001

SCALE: 1:1 SHEET 1 OF 1