(1) Switched with Normal Load when Normal Power is available

(2) Held ON when Normal Power is not available and Emergency Power is available

HBA #UL924BRUNV

For Use with LX or CX Relay Panels where Emergency Lighting should be held on during a utility power failure and controlled by panel while normal power is available and there is no dedicated relay in the in the panel controlling the Emergency Circuit

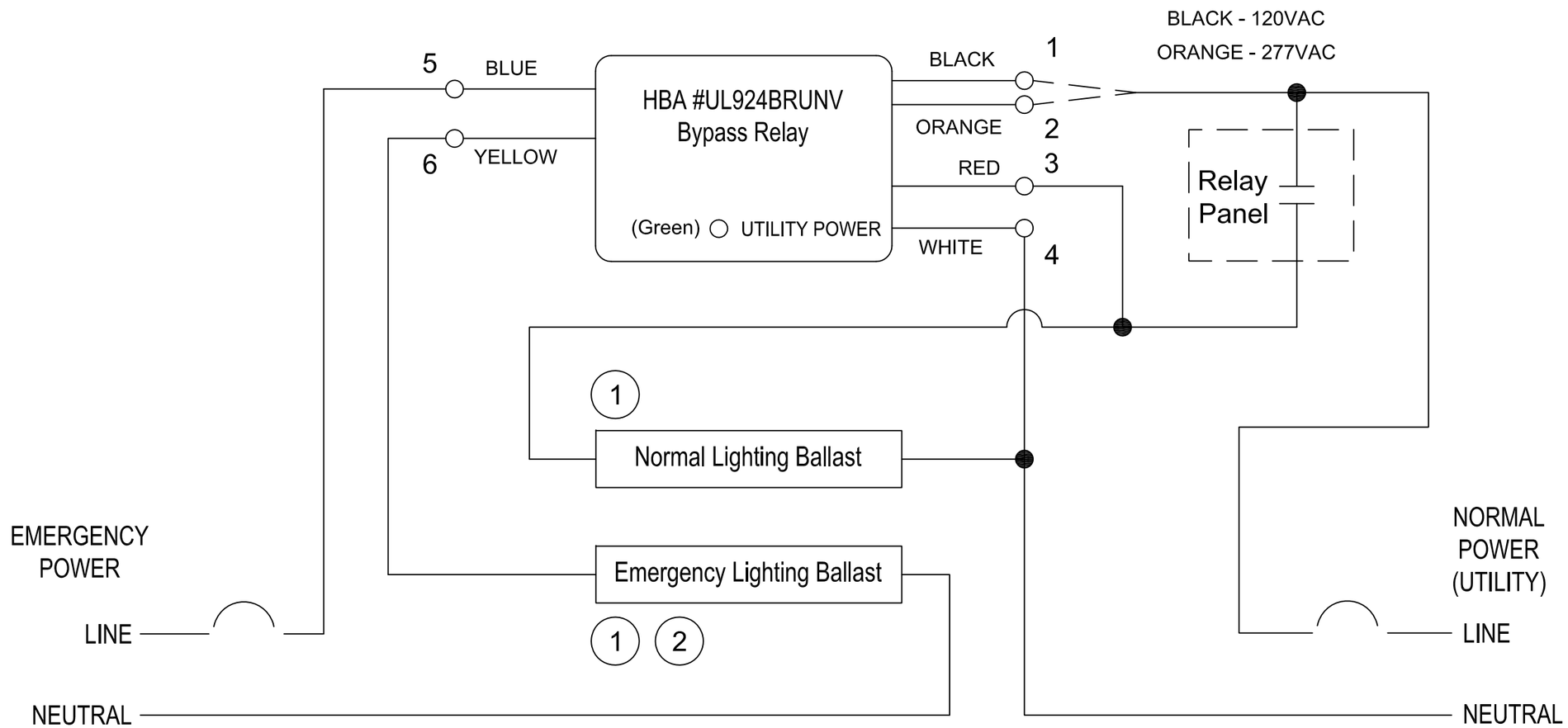

REV	REVISION DESCRIPTION	DATE

LX AND CX PANELS WITH UL924BRUNV

ADDRESS
STREET
CITY, STATE

#UL924BRUNV

Hubbell Building Automation

(888) 698-3242
(512) 450-1100

9601 Dessau Rd. - Bldg 1
Austin, Tx 78745

THIS DOCUMENT AND SPECIFICATIONS DESCRIBED WITHIN ARE THE EXCLUSIVE PROPERTY OF HUBBELL BUILDING AUTOMATION ISSUED IN THE STRICTEST CONFIDENCE, AND SHALL NOT BE REPRODUCED, COPIED OR USED WITHOUT PRIOR WRITTEN PERMISSION.

STATUS			
DETAIL			
DRAWN	REVIEWED		DATE
AMJ	XXX		10-22-12

1