User's Guide

SBOU225A–May 2019–Revised December 2019

INA293EVM

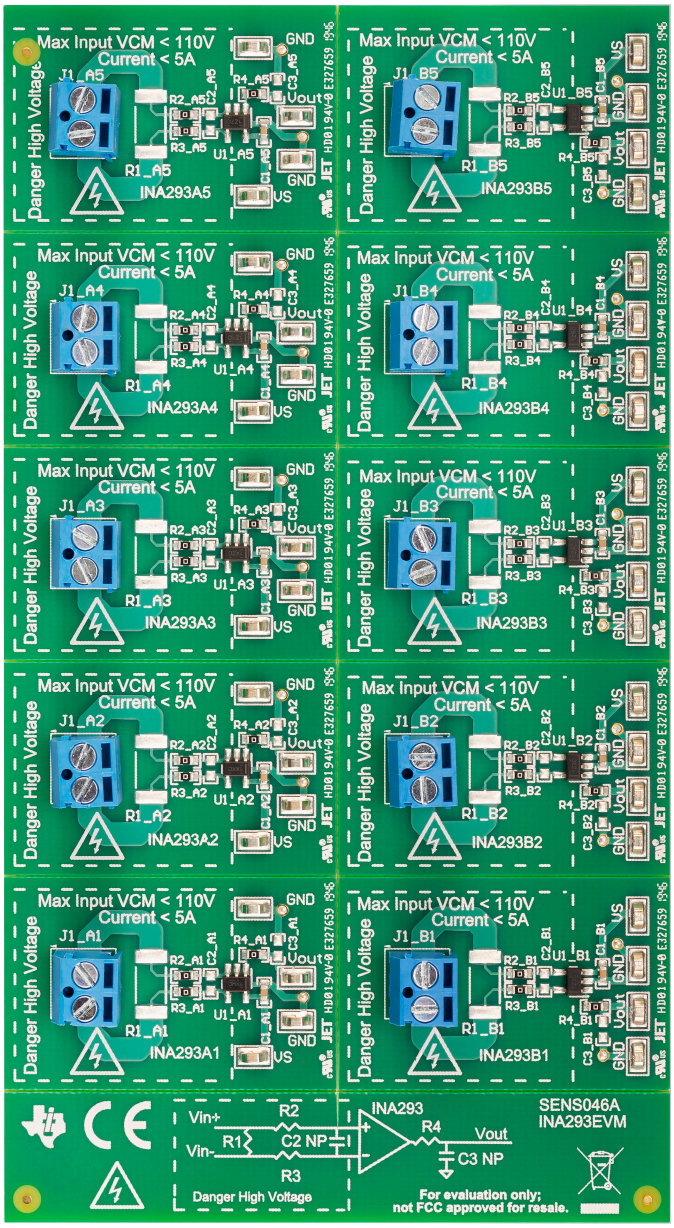

This user's guide describes the characteristics, operation, and use of the INA293 evaluation module (EVM). This EVM is designed to evaluate the performance of the INA293 voltage-output, current shunt monitor in a variety of configurations. Throughout this document, the terms evaluation board, evaluation module, and EVM are synonymous with the INA293EVM. This document also includes a schematic, reference printed-circuit board (PCB) layouts, and a complete bill of materials (BOM).

Copyright © 2019, Texas Instruments Incorporated

Contents

1 General Texas Instruments High Voltage Evaluation (TI HV EVM) User Safety Guidelines 3
2 Overview 5
  2.1 EVM Kit Contents 5
  2.2 Related Documentation From Texas Instruments 5
3 Hardware 6
  3.1 Features 6
4 Operation 7
  4.1 Quick Start Setup 7
  4.2 Measurements 7
5 EVM Components 8
  5.1 R2_Xn, R3_Xn, R4_Xn, C2_Xn, C3_Xn 8
  5.2 C1_Xn 8
  5.3 R1_Xn 8
  5.4 U1_Xn (INA293) 8
6 Schematic, PCB Layout, and Bill of Materials 9
  6.1 Schematics 9
  6.2 PCB Layout 12
  6.3 Bill of Materials 16

List of Figures

1 INA293EVM Schematic: Gain A1 Panel 10
2 INA293EVM Schematic: Gain B1 Panel 11
3 INA293EVM Top Overlay 12
4 INA293EVM Bottom Overlay 12
5 INA293EVM Top Layer 12
6 INA293EVM Bottom Layer 12
7 INA293EVM Top Solder 13
8 INA293EVM Bottom Solder 13
9 INA293EVM Drill Drawing 14

List of Tables

1 INA293 Gain Option Summary 5
2 INA293EVM Kit Contents 5
3 Related Documentation 5
4 Bill of Materials 16

Trademarks

All trademarks are the property of their respective owners.

Copyright © 2019, Texas Instruments Incorporated

1 General Texas Instruments High Voltage Evaluation (TI HV EVM) User Safety Guidelines

WARNING

Always follow TI's setup and application instructions, including use of all interface components within their recommended electrical rated voltage and power limits. Always use electrical safety precautions to help ensure your personal safety and those working around you. Contact TI's Product Information Center http://support/ti./com for further information.

Save all warnings and instructions for future reference.

WARNING

Failure to follow warnings and instructions may result in personal injury, property damage or death due to electrical shock and burn hazards.

The term TI HV EVM refers to an electronic device typically provided as an open framed, unenclosed printed circuit board assembly. It is *intended strictly for use in development laboratory environments, solely for qualified professional users having training, expertise and knowledge of electrical safety risks in development and application of high voltage electrical circuits. Any other use and/or application are strictly prohibited by Texas Instruments.* If you are not suitable qualified, you should immediately stop from further use of the HV EVM.

1. Work Area Safety
   a. Keep work area clean and orderly.
   b. Qualified observer(s) must be present anytime circuits are energized.
   c. Effective barriers and signage must be present in the area where the TI HV EVM and its interface electronics are energized, indicating operation of accessible high voltages may be present, for the purpose of protecting inadvertent access.
   d. All interface circuits, power supplies, evaluation modules, instruments, meters, scopes and other related apparatus used in a development environment exceeding 50Vrms/75VDC must be electrically located within a protected Emergency Power Off EPO protected power strip.
   e. Use stable and nonconductive work surface.
   f. Use adequately insulated clamps and wires to attach measurement probes and instruments. No freehand testing whenever possible.
2. Electrical Safety
   As a precautionary measure, it is always a good engineering practice to assume that the entire EVM may have fully accessible and active high voltages.
   a. De-energize the TI HV EVM and all its inputs, outputs and electrical loads before performing any electrical or other diagnostic measurements. Revalidate that TI HV EVM power has been safely de-energized.
   b. With the EVM confirmed de-energized, proceed with required electrical circuit configurations, wiring, measurement equipment connection, and other application needs, while still assuming the EVM circuit and measuring instruments are electrically live.
   c. After EVM readiness is complete, energize the EVM as intended.

WARNING

While the EVM is energized, never touch the EVM or its electrical circuits, as they could be at high voltages capable of causing electrical shock hazard.

Copyright © 2019, Texas Instruments Incorporated

3. Personal Safety
   a. Wear personal protective equipment (for example, latex gloves or safety glasses with side shields) or protect EVM in an adequate lucent plastic box with interlocks to protect from accidental touch.

Limitation for safe use:

EVMs are not to be used as all or part of a production unit.

Copyright © 2019, Texas Instruments Incorporated

2 Overview

The INA293 device is a voltage-output, high-side and low-side measurement, current sense amplifier with an enable pin in a very-small SOT-23 package. As shown in Table 1, the INA293 has gains that range from 20 V/V to 500 V/V, depending on the gain option selected. The voltage developed across the device inputs is amplified by the corresponding gain of the specific device, and is presented at the output pin. The device accurately senses voltage drops across shunts at common-mode voltages from –4 V to +110 V, independent of supply voltages. The device survives common-mode voltages from –20 V to +120 V. The device operates with supply voltages between 2.7 V and 20 V, and draws a typical of 1.7 mA at room temperature.

Table 1. INA293 Gain Option Summary

Product[(1)]	Gain (V/V)
INA293A1 and INA293B1	20
INA293A2 and INA293B2	50
INA293A3 and INA293B3	100
INA293A4 and INA293B4	200
INA293A5 and INA293B5	500

(1) INA293B is a preview device.

2.1 EVM Kit Contents

Table 2 summarizes the contents of the INA293EVM kit. Contact the Texas Instruments Product Information Center nearest you if any component is missing. TI also recommends checking the INA293 device product folder at www.ti.com for any further information regarding this product.

Table 2. INA293EVM Kit Contents

Item	Item Part Number	Quantity
INA293EVM test board	INA293EVM	1

2.2 Related Documentation From Texas Instruments

This document provides information regarding Texas Instruments' integrated circuits used in the assembly of the INA293EVM.

Table 3. Related Documentation

Document	Literature Number
INA293 product data sheet	SBOS870

Copyright © 2019, Texas Instruments Incorporated

3 Hardware

The INA293EVM provides basic functional evaluation of the INA293. The fixture layout is not intended to be a model for the target circuit, nor is it laid out for electromagnetic compatibility (EMC) testing. The INA293EVM consists of one PCB with an option to cut out ten individual PCBs, one for each of the five gain options (1 to 5) and the two different pin outs (A and B) listed in Table 1. Be aware that because of the different pinouts of the A and B versions, the layouts and test point locations are also different. Each of the PCB cutouts consists of one INA293*Xn* device (where *X* is A or B and *n* is 1, 2, 3, 4, or 5), and test points and sockets for external hardware connections, as well as pads to solder down optional circuitry.

3.1 Features

The INA293EVM PCB provides the following features:

- Evaluation of all gain options through provided device boards
- Ease of access to device pins with test points
- Pads and sockets for optional filtering at the input pins and output pin
- Multiple input signal options, including a method to solder a shunt resistor (2512) and safely measure current up to 5 A.

See the device data sheet for comprehensive information about the INA293 and the available gain options.

Copyright © 2019, Texas Instruments Incorporated

4 Operation

4.1 Quick Start Setup

Follow these procedures to set up and use one of the panels of the INA293EVM. For the following instructions, X is pinout A or B, and n is gain option 1, 2, 3, 4, or 5.

Step 1. Choose the desired gain option panel and pin out variation.

Step 2. Connect an external dc supply voltage (between 1.7 V and 20 V) to a VS test point, and connect the ground reference of that supply to a GND test point on the same panel.

Step 3. Provide a differential input voltage signal to the Vin+ and Vin– nodes by connecting the signal leads to the J1_Xn pin 1 and J1_Xn pin 2 on the EVM, as explained in Section 4.2. The INA293 is a unidirectional current-sensing device because there is no reference pin; therefore, the device can only measure current in one direction.

4.2 Measurements

The INA293EVM allows the user to either emulate the voltage developed across a sense resistor based on a given set of system conditions, or to connect the device inputs to an external shunt. Optionally, a surface-mount technology (SMT) shunt resistor can be soldered across the Vin+ and Vin– pads, and these inputs can be connected in series with the external system and load.

To configure a measurement evaluation without a the onboard shunt resistor, follow this procedure:

1. Connect a positive differential voltage across the Vin+ (J1_Xn) and Vin– (J1_Xn) tabs. Given the internal GND reference of the device, make sure that the Vin+ pin is the more positive of the two inputs.
2. Additionally, if the differential voltage supply is a floating supply, connect a –4-V to 110-V common-mode voltage to the inputs by connecting the positive lead of the external voltage source to the Vin– (J1_Xn) tab, and source ground to a GND test point. This action effectively raises the absolute common-mode voltage of the input pins, while still retaining a positive input differential signal.
3. If an external shunt is being used make the connections such that the sensing location is across the shunt and there will be no high current on the sensing path. See Getting Started with TI Precision Labs - Current Sense Amplifiers: Shunt Resistor Layout
4. Measure the output voltage at the Vout test point with respect to GND.

To configure a measurement evaluation with a shunt resistor, follow this procedure:

1. Solder a 2512 resistor at the R1_Xn pads that connects the Vin+ (J1_Xn) and Vin– (J1_Xn) inputs.
2. Connect the Vin+ (J1_Xn) and Vin– (J1_Xn) tabs in series with the load and bus voltage sources while powered off.

WARNING

If measuring current, first make sure that the equipment (shunt resistor, wires, connectors, and so on) can support the amperage and power dissipation. Secondly, make sure that the current flowing through J1 does not exceed 5 A. Failure to do so can result in hot surfaces (> 55°C), damage to the EVM, or personal injury.

3. Power on the system and measure the output voltage at the Vout test point. Vout is equal to the gain of the device multiplied by the differential voltage measured directly at the device input pins.

Copyright © 2019, Texas Instruments Incorporated

5 EVM Components

This section summarizes the INA293EVM components. For the following instructions, X is pinout A or B, and n is gain option 1, 2, 3, 4, or 5.

5.1 R2_Xn, R3_Xn, R4_Xn, C2_Xn, C3_Xn

R2_Xn, R3_Xn, R4_Xn, are factory-installed 0-Ω 0603 resistors.

C2_Xn, C3_Xn, are not populated.

Collectively, these pads allow for user-defined filters for the input pins (IN+ and IN–) and output pin (OUT) of INA293. If a filter is desired, remove these resistors and replace them with > 0-Ω SMT resistors, and populate the capacitor pads with capacitors. When using input filtering, take into account the input bias current of the device.

5.2 C1_Xn

C1_Xn is a 0.1-µF, power-supply bypass capacitor.

5.3 R1_Xn

R1_Xn is unpopulated, but allows for a surface-mount shunt resistor to be soldered down between the Vin+ and Vin– pads, which are sensed by IN+ and IN– input pins. If used, make sure R1_Xn has proper power dissipation for the selected current load. The chosen resistor must have a 2512 footprint.

5.4 U1_Xn (INA293)

U1_Xn is the location for the INA293Xn test device.

The following list of factors are involved in selecting the appropriate device gain:

- The differential input voltage is either applied across the inputs or developed based on the load current that flows through the shunt resistor.
- Make sure that the output voltage does not exceed the supply voltage. This limiting factor requires attention to device selection.
- The selected device must allow the output voltage to remain within the acceptable range after the developed input voltage is amplified by the respective device gain. The output voltage must remain within the device-specified swing limitations for response in the linear range.
- An output below the minimum allowable output requires the selection of a device with a higher gain. Likewise, an output above the maximum allowable output requires the selection of a device with a lower gain.

Copyright © 2019, Texas Instruments Incorporated

6 Schematic, PCB Layout, and Bill of Materials

NOTE: Board layouts are not to scale. These figures are intended to show how the board is laid out; they are not intended to be used for manufacturing INA293EVM PCBs.

6.1 Schematics

Figure 1 is shown below and is the schematic of the INA293EVM for all gain versions for the A pinout. The difference is noted on the reference designator ending in the gain option _An. Figure 2 shows the B1 gain panel and this is also a copy for all the other gain options with the reference designator ending with the gain option _BnFigure 2.

Copyright © 2019, Texas Instruments Incorporated

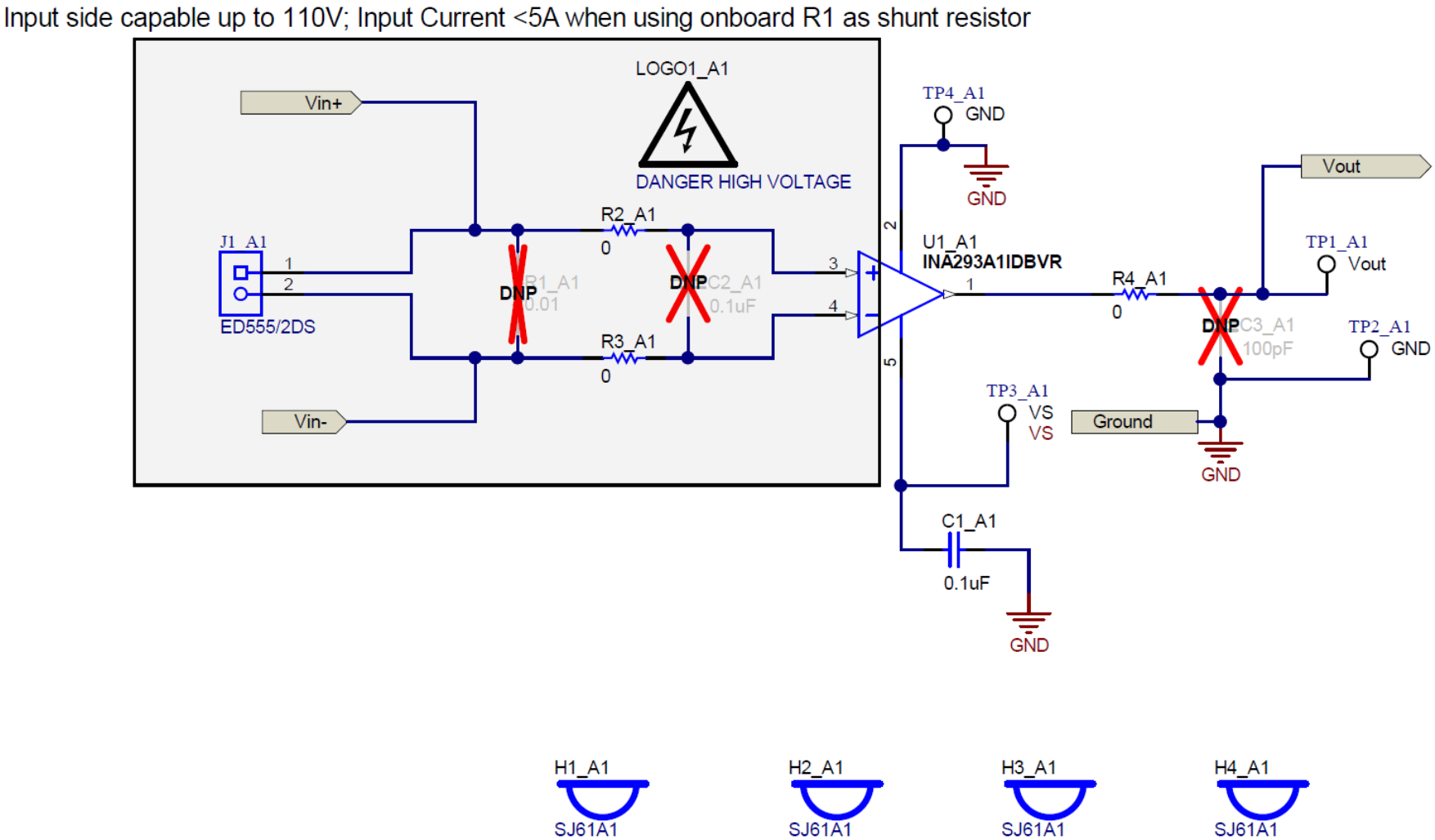

Figure 1. INA293EVM Schematic: Gain A1 Panel

Copyright © 2019, Texas Instruments Incorporated

Input side capable up to 110V; Input Current <5A when using onboard R1 as shunt resistor

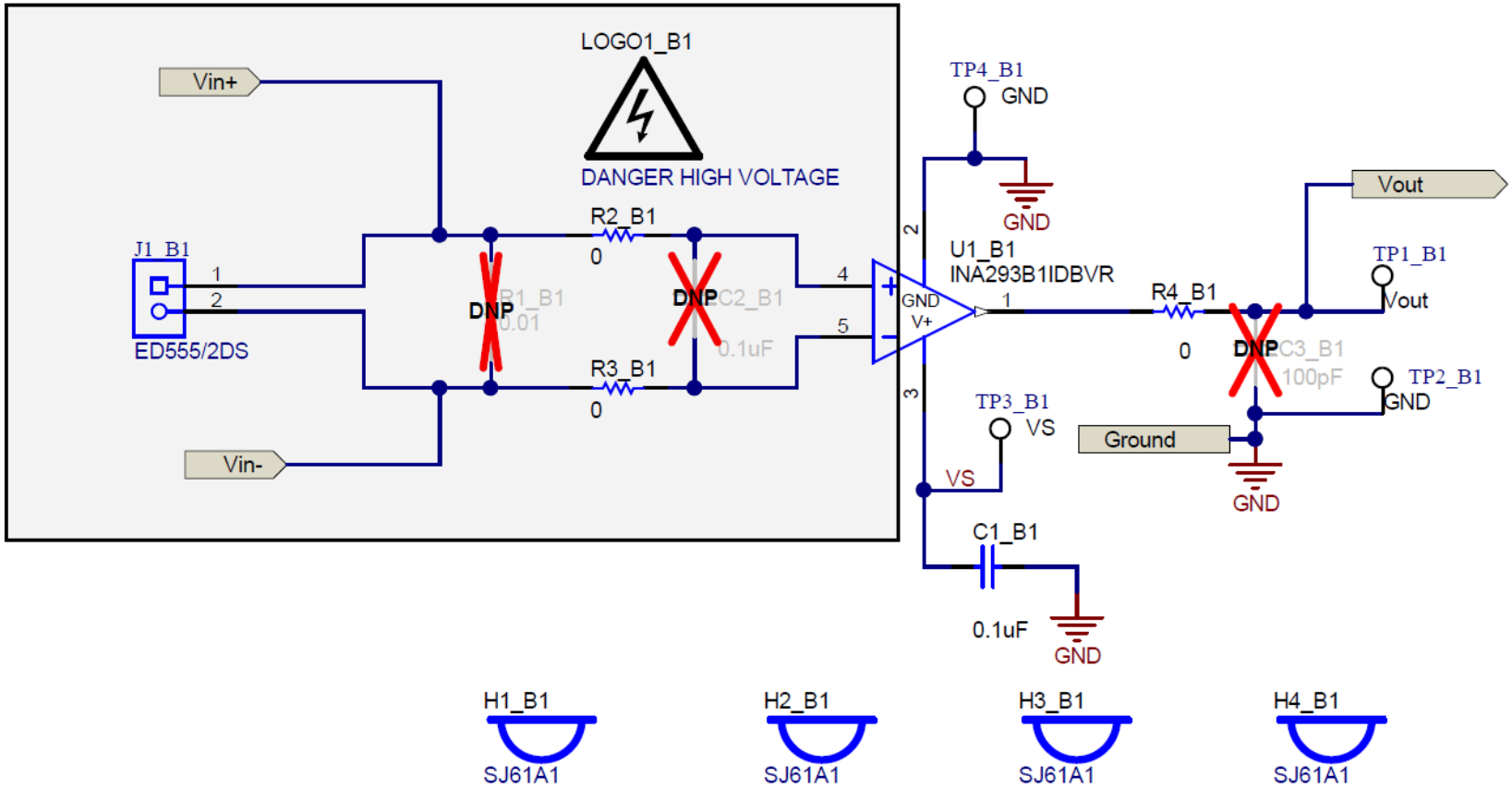

Figure 2. INA293EVM Schematic: Gain B1 Panel

Copyright © 2019, Texas Instruments Incorporated

6.2 PCB Layout

Figure 3 through Figure 9 illustrate the PCB layout for the INA293EVM.

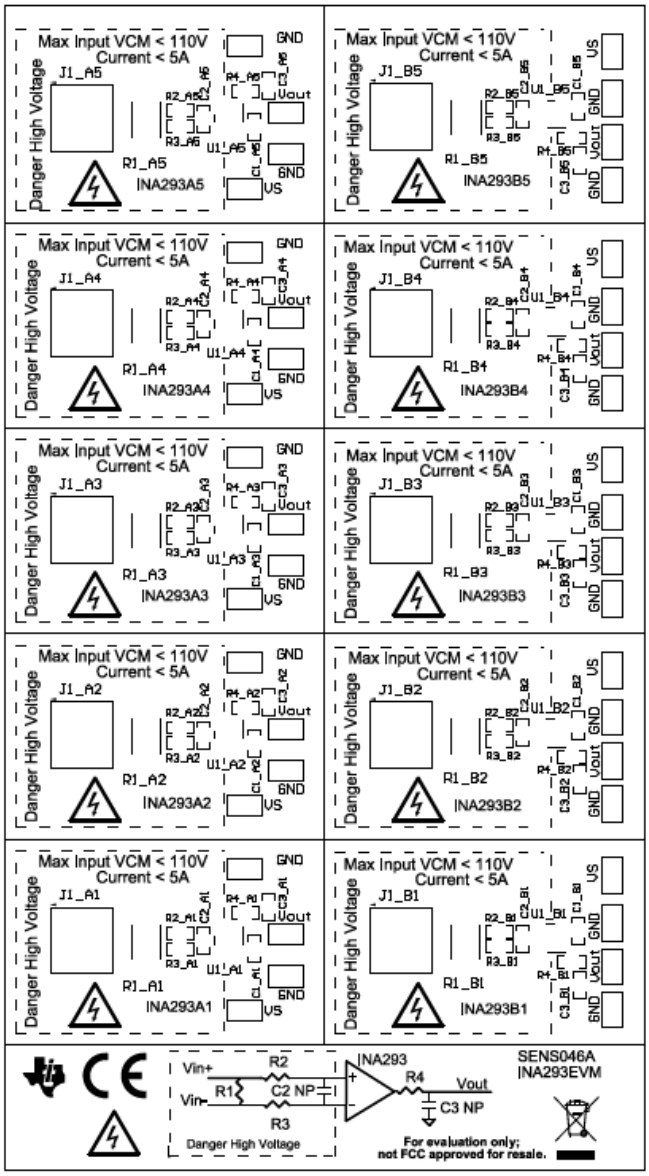

Figure 3. INA293EVM Top Overlay

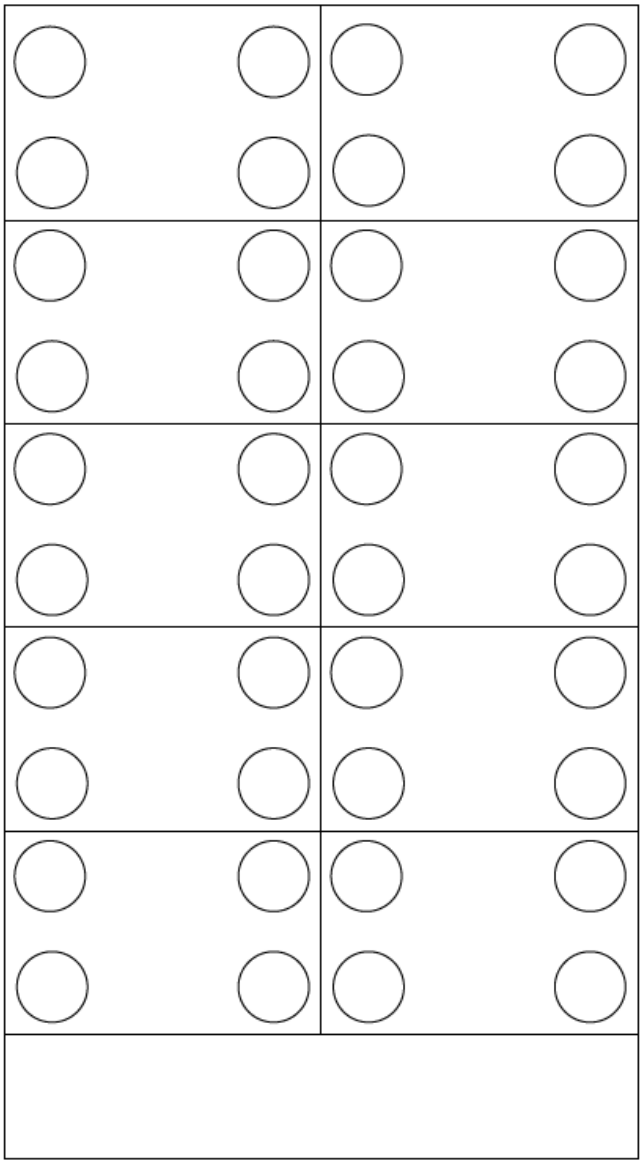

Figure 4. INA293EVM Bottom Overlay

Copyright © 2019, Texas Instruments Incorporated

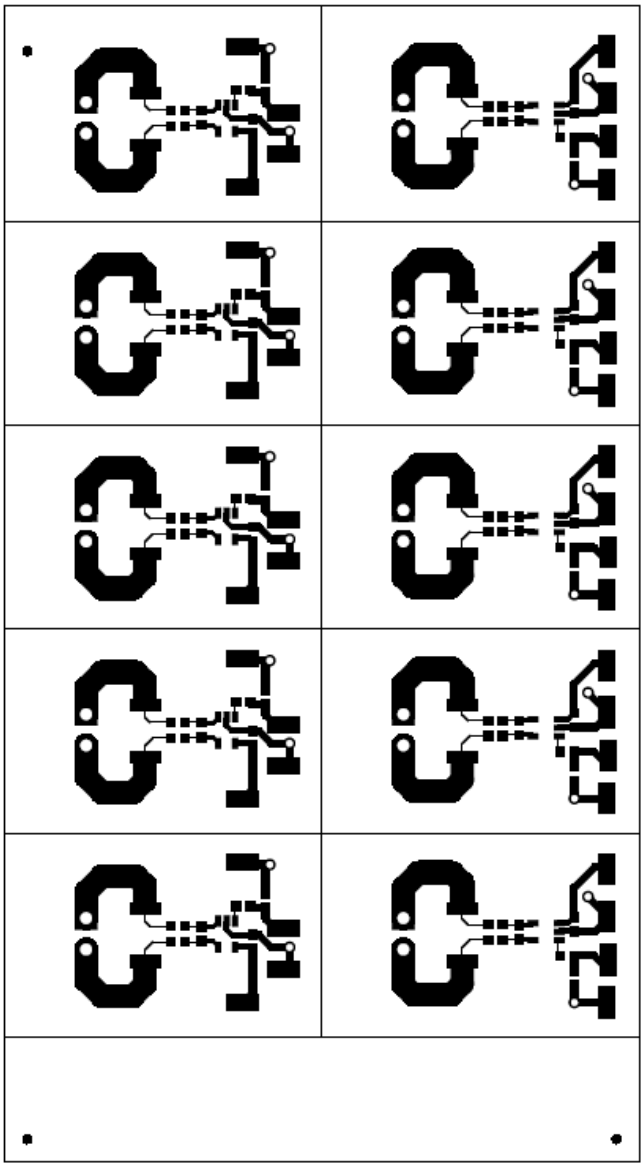

Figure 5. INA293EVM Top Layer

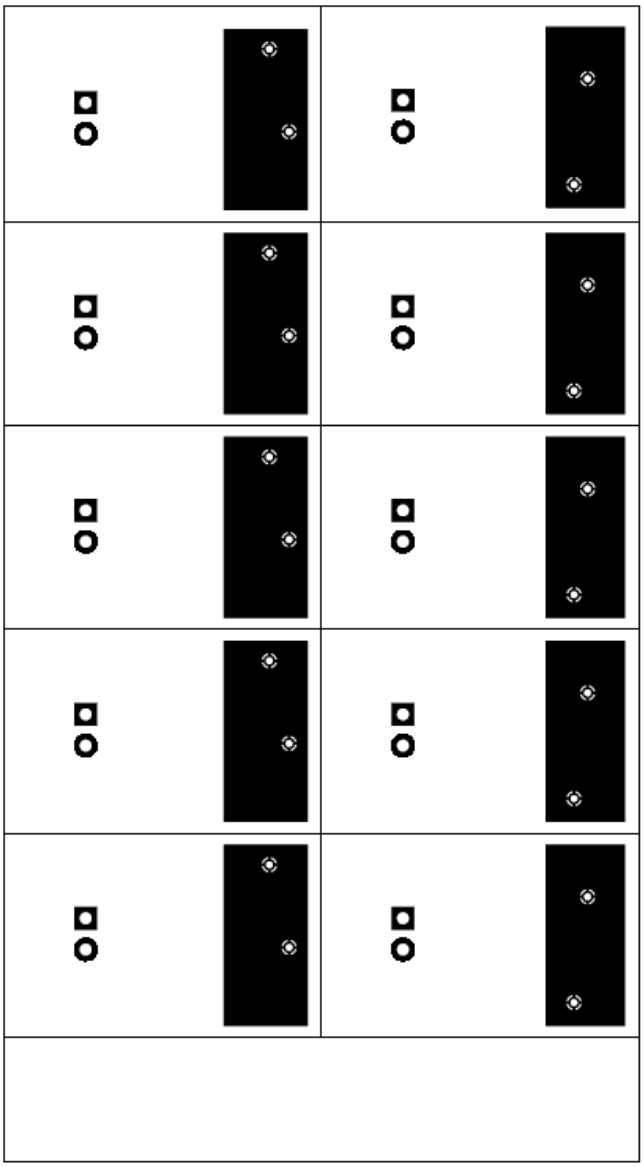

Figure 6. INA293EVM Bottom Layer

Copyright © 2019, Texas Instruments Incorporated

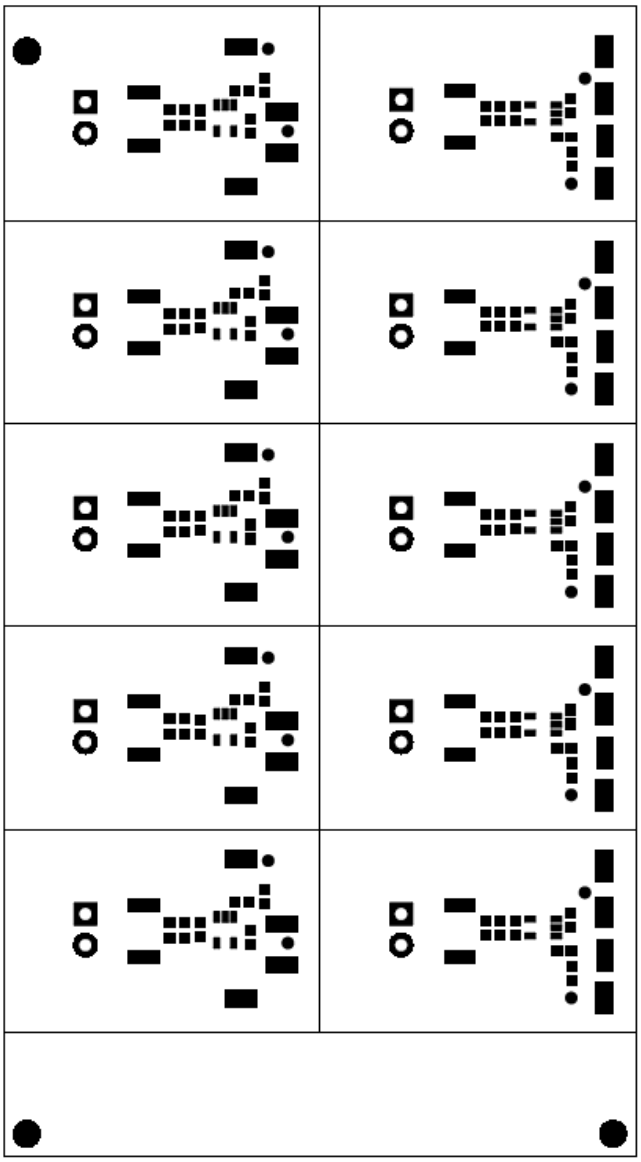

Figure 7. INA293EVM Top Solder

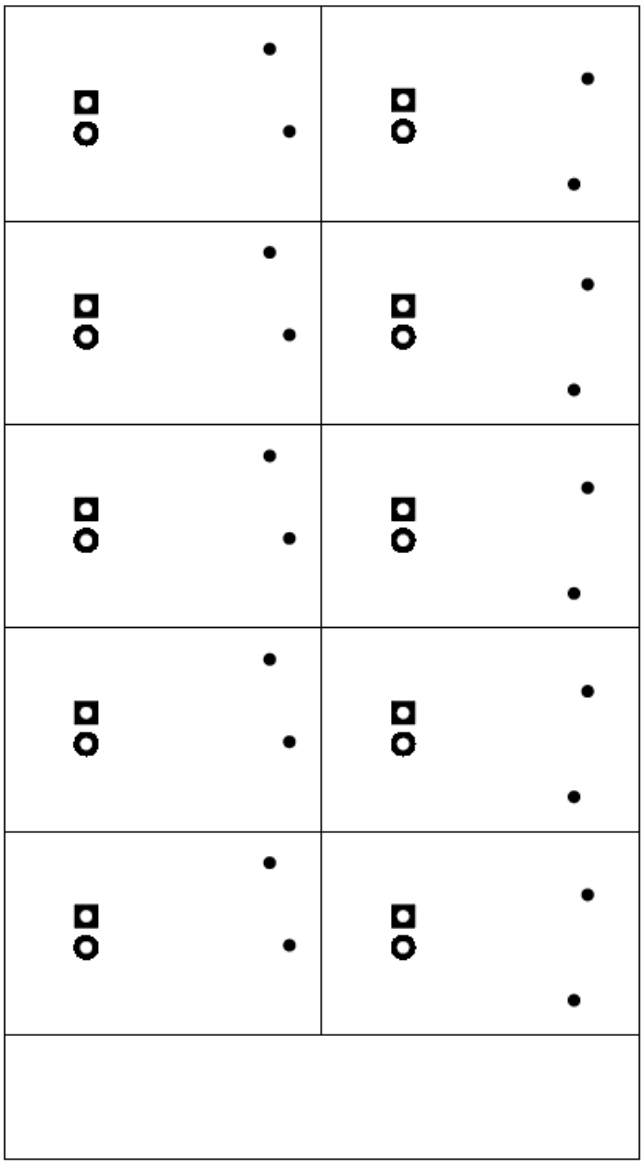

Figure 8. INA293EVM Bottom Solder

Copyright © 2019, Texas Instruments Incorporated

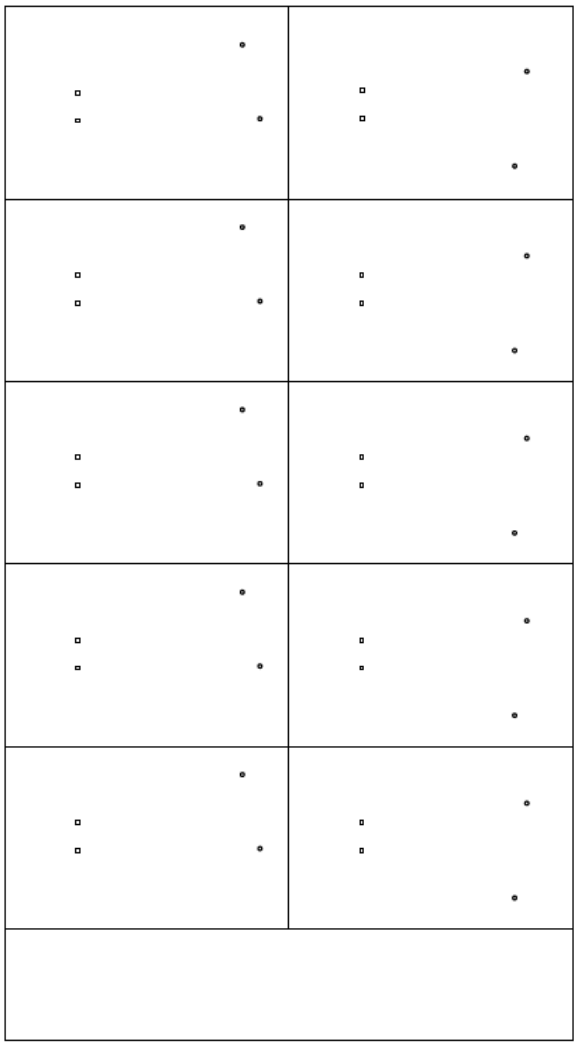

Symbol	Quantity	Finished Hole Size	Plated	Hole Type	Drill Layer Pair	Hole Tolerance
○	20	28.00mil (0.711mm)	PTH	Round	Top Layer - Bottom Layer	
□	20	50.00mil (1.270mm)	PTH	Round	Top Layer - Bottom Layer	
	40 Total					

Figure 9. INA293EVM Drill Drawing

Copyright © 2019, Texas Instruments Incorporated

6.3 Bill of Materials

Table 4 provides the parts list for the INA293EVM.

Table 4. Bill of Materials

Designator	QTY	Value	Description	Package Reference	Part Number	Manufacturer
C1_A1, C1_A2, C1_A3, C1_A4, C1_A5, C1_B1, C1_B2, C1_B3, C1_B4, C1_B5	10	0.1uF	CAP, CERM, 0.1 uF, 25 V, +/- 10%, X7R, AEC-Q200 Grade 1, 0603	0603	CGA3E2X7R1E104K080AA	TDK
H1_A1, H1_A2, H1_A3, H1_A4, H1_A5, H1_B1, H1_B2, H1_B3, H1_B4, H1_B5, H2_A1, H2_A2, H2_A3, H2_A4, H2_A5, H2_B1, H2_B2, H2_B3, H2_B4, H2_B5, H3_A1, H3_A2, H3_A3, H3_A4, H3_A5, H3_B1, H3_B2, H3_B3, H3_B4, H3_B5, H4_A1, H4_A2, H4_A3, H4_A4, H4_A5, H4_B1, H4_B2, H4_B3, H4_B4, H4_B5	40		Bumpon, Cylindrical, 0.312 X 0.200, Black	Black Bumpon	SJ61A1	3M
J1_A1, J1_A2, J1_A3, J1_A4, J1_A5, J1_B1, J1_B2, J1_B3, J1_B4, J1_B5	10		Terminal Block, 3.5mm Pitch, 2x1, TH	7.0x8.2x6.5mm	ED555/2DS	On-Shore Technology
R2_A1, R2_A2, R2_A3, R2_A4, R2_A5, R2_B1, R2_B2, R2_B3, R2_B4, R2_B5, R3_A1, R3_A2, R3_A3, R3_A4, R3_A5, R3_B1, R3_B2, R3_B3, R3_B4, R3_B5, R4_A1, R4_A2, R4_A3, R4_A4, R4_A5, R4_B1, R4_B2, R4_B3, R4_B4, R4_B5	30	0	RES, 0, 5%, 0.125 W, 0603	0603	MCT06030Z0000ZP500	Vishay/Beyschlag
TP1_A1, TP1_A2, TP1_A3, TP1_A4, TP1_A5, TP1_B1, TP1_B2, TP1_B3, TP1_B4, TP1_B5, TP2_A1, TP2_A2, TP2_A3, TP2_A4, TP2_A5, TP2_B1, TP2_B2, TP2_B3, TP2_B4, TP2_B5, TP3_A1, TP3_A2, TP3_A3, TP3_A4, TP3_A5, TP3_B1, TP3_B2, TP3_B3, TP3_B4, TP3_B5, TP4_A1, TP4_A2, TP4_A3, TP4_A4, TP4_A5, TP4_B1, TP4_B2, TP4_B3, TP4_B4, TP4_B5	40		Test Point, Miniature, SMT	Testpoint_Keystone_Miniature	5015	Keystone
U1_A1	1		INA293 High-Voltage, High Bandwidth, Unidirectional, 110-V Common-Mode, Current-Sense Amplifier, DBV0005A (SOT-23-5)	DBV0005A	INA293A1IDBVR	Texas Instruments
U1_A2	1		INA293 High-Voltage, High Bandwidth, Unidirectional, 110-V Common-Mode, Current-Sense Amplifier, DBV0005A (SOT-23-5)	DBV0005A	INA293A2IDBVR	Texas Instruments
U1_A3	1		INA293 High-Voltage, High Bandwidth, Unidirectional, 110-V Common-Mode, Current-Sense Amplifier, DBV0005A (SOT-23-5)	DBV0005A	INA293A3IDBVR	Texas Instruments
U1_A4	1		INA293 High-Voltage, High Bandwidth, Unidirectional, 110-V Common-Mode, Current-Sense Amplifier, DBV0005A (SOT-23-5)	DBV0005A	INA293A4IDBVR	Texas Instruments

Copyright © 2019, Texas Instruments Incorporated

Table 4. Bill of Materials (continued)

Designator	QTY	Value	Description	Package Reference	Part Number	Manufacturer
U1_A5	1		INA293 High-Voltage, High Bandwidth, Unidirectional, 110-V Common-Mode, Current-Sense Amplifier, DBV0005A (SOT-23-5)	DBV0005A	INA293A5IDBVR	Texas Instruments
U1_B1	1		INA293 High-Voltage, High Bandwidth, Unidirectional, 110-V Common-Mode, Current-Sense Amplifier, DBV0005A (SOT-23-5)	DBV0005A	INA293B1IDBVR	Texas Instruments
U1_B2	1		INA293 High-Voltage, High Bandwidth, Unidirectional, 110-V Common-Mode, Current-Sense Amplifier, DBV0005A (SOT-23-5)	DBV0005A	INA293B2IDBVR	Texas Instruments
U1_B3	1		INA293 High-Voltage, High Bandwidth, Unidirectional, 110-V Common-Mode, Current-Sense Amplifier, DBV0005A (SOT-23-5)	DBV0005A	INA293B3IDBVR	Texas Instruments
U1_B4	1		INA293 High-Voltage, High Bandwidth, Unidirectional, 110-V Common-Mode, Current-Sense Amplifier, DBV0005A (SOT-23-5)	DBV0005A	INA293B4IDBVR	Texas Instruments
U1_B5	1		INA293 High-Voltage, High Bandwidth, Unidirectional, 110-V Common-Mode, Current-Sense Amplifier, DBV0005A (SOT-23-5)	DBV0005A	INA293B5IDBVR	Texas Instruments
C2_A1, C2_A2, C2_A3, C2_A4, C2_A5, C2_B1, C2_B2, C2_B3, C2_B4, C2_B5	0	0.1uF	CAP, CERM, 0.1 uF, 25 V, +/- 10%, X7R, AEC-Q200 Grade 1, 0603	0603	CGA3E2X7R1E104K080AA	TDK
C3_A1, C3_A2, C3_A3, C3_A4, C3_A5, C3_B1, C3_B2, C3_B3, C3_B4, C3_B5	0	100pF	CAP, CERM, 100 pF, 50 V,+/- 10%, X7R, 0603	0603	CL10B101KB8NNNC	Samsung Electro-Mechanics
FID1, FID2, FID3	0		Fiducial mark. There is nothing to buy or mount.	N/A	N/A	N/A
R1_A1, R1_A2, R1_A3, R1_A4, R1_A5, R1_B1, R1_B2, R1_B3, R1_B4, R1_B5	0	0.01	RES, 0.01, 1%, 3 W, 2512	2512	CRA2512-FZ-R010ELF	Bourns

Copyright © 2019, Texas Instruments Incorporated

Revision History

NOTE: Page numbers for previous revisions may differ from page numbers in the current version.

Changes from Original (May 2019) to A Revision	Page
• Changed INA293-Q1 to INA293.	1
• Updated Measurements section.	7
• Updated Schematics section.	9
• Updated Bill of Materials.	17

Copyright © 2019, Texas Instruments Incorporated

IMPORTANT NOTICE AND DISCLAIMER

TI PROVIDES TECHNICAL AND RELIABILITY DATA (INCLUDING DATASHEETS), DESIGN RESOURCES (INCLUDING REFERENCE DESIGNS), APPLICATION OR OTHER DESIGN ADVICE, WEB TOOLS, SAFETY INFORMATION, AND OTHER RESOURCES “AS IS” AND WITH ALL FAULTS, AND DISCLAIMS ALL WARRANTIES, EXPRESS AND IMPLIED, INCLUDING WITHOUT LIMITATION ANY IMPLIED WARRANTIES OF MERCHANTABILITY, FITNESS FOR A PARTICULAR PURPOSE OR NON-INFRINGEMENT OF THIRD PARTY INTELLECTUAL PROPERTY RIGHTS.

These resources are intended for skilled developers designing with TI products. You are solely responsible for (1) selecting the appropriate TI products for your application, (2) designing, validating and testing your application, and (3) ensuring your application meets applicable standards, and any other safety, security, or other requirements. These resources are subject to change without notice. TI grants you permission to use these resources only for development of an application that uses the TI products described in the resource. Other reproduction and display of these resources is prohibited. No license is granted to any other TI intellectual property right or to any third party intellectual property right. TI disclaims responsibility for, and you will fully indemnify TI and its representatives against, any claims, damages, costs, losses, and liabilities arising out of your use of these resources.

TI’s products are provided subject to TI’s Terms of Sale (www.ti.com/legal/termsofsale.html) or other applicable terms available either on ti.com or provided in conjunction with such TI products. TI’s provision of these resources does not expand or otherwise alter TI’s applicable warranties or warranty disclaimers for TI products.

Mailing Address: Texas Instruments, Post Office Box 655303, Dallas, Texas 75265
Copyright © 2019, Texas Instruments Incorporated