THIS DRAWING IS UNPUBLISHED. RELEASED FOR PUBLICATION , .
© COPYRIGHT – By – ALL RIGHTS RESERVED.

REVISIONS

P	LTR	DESCRIPTION	ECO	DATE	DWN	APVD
	C	CHANGE THE VENT HOLE SHAPE FROM RECTANGLE TO CIRCLE ONE	ECO-13-015347	16-DEC-13	XL,Y	B,F
	C1	ADD A NEW PN	ECO-14-011106	18-JUL-14	XL,Y	B,F
	C2	ADD NEW PN	ECO-16-017849	12-DEC-16	XR,L	HL,C

NOTES:

1.LOT NO. SYSTEM AS FOLLOWING:

0 8 2 5
- WEEK
- YEAR

2.GENERAL TOLERANCE AS FOLLOWING:

TOLERANCE	
0~0.99mm	±0.1
1mm~2.99mm	±0.2
3mm MIN.	±0.3

3.TERMINAL DIMENSION IS NOT INCLUDING SOLDER TIP.

Ⓑ 4.FOR THE TIN-PLATING OF THE PINS:
+0.1mm FOR WIDTH,THICKNESS AND DIAMETER.
+0.5mm FOR LENGTH.

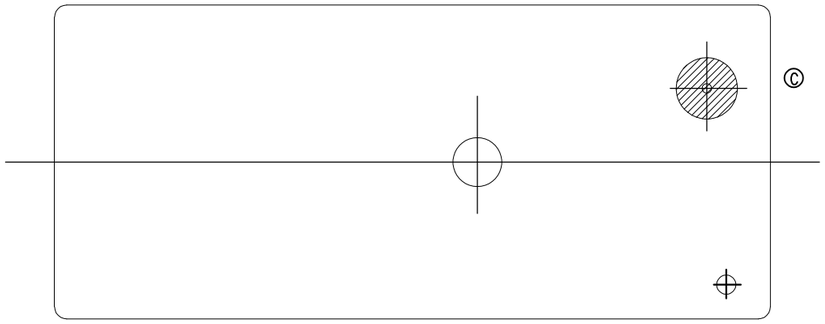

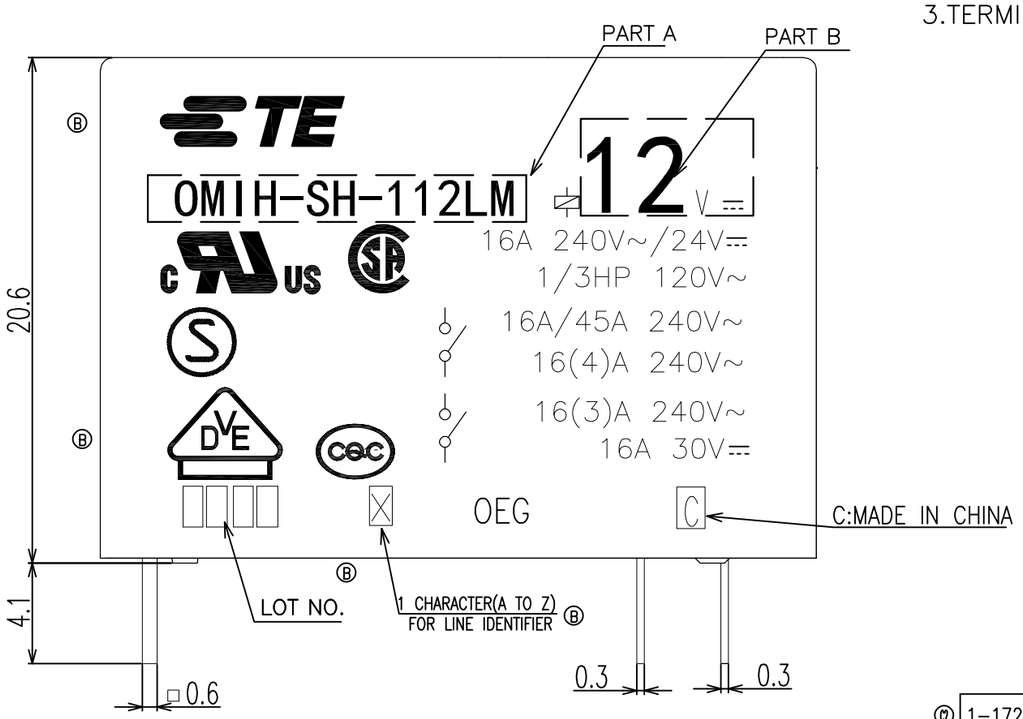

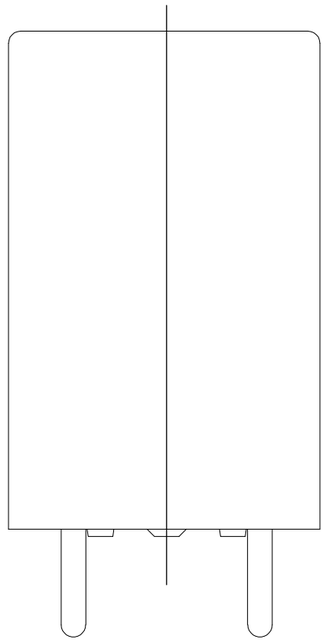

CONNECTION DIAGRAM (BOTTOM VIEW)

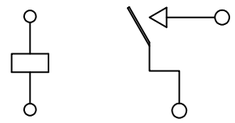

DRILLING DIAGRAM(2/1) (BOTTOM VIEW)

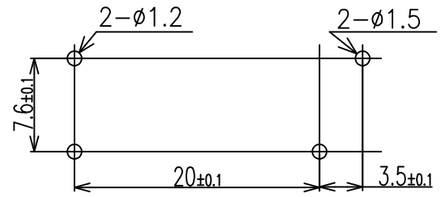

		UV RESIN	UV SEAL	16
		EPOXY RESIN	SEAL	15
UL94 V-0		PBT	CASE	14
CLASS E		UEW	MAGNETIC WIRE	13
UL94 V-0		PET	BASE	12
UL94 V-0		PBT	BOBBIN	11
	SOLDER DIP	CP WIRE	COIL TERMINAL	10
UL94 V-0		PPS	CARD	9
		Ag ALLOY	MOVABLE CONTACT	8
		Ag ALLOY	STATIONARY CONTACT	7
		Cu ALLOY	HINGE SPRING	6
	SOLDER DIP	Cu ALLOY	STATIONARY TERMINAL	5
	SOLDER DIP	Cu ALLOY	MOVABLE SPRING	4
		STEEL	CORE	3
		STEEL	ARMATURE	2
		STEEL	YOKE	1
INCOMBUSTIBILITY	TREATMENT	MATERIAL	DESCRIPTION	ITEM

	TE PART NO	DESCRIPTION	PART B	PART A	PACK. SPEC.	No.
Ⓜ	1-1721685-1	OMIH-SH-112LM,03020	12	OMIH-SH-112LM	107-84028	2
Ⓒ1	1721685-8	OMIH-SH-112LM,00001	12	OMIH-SH-112LM	107-79006	1
	6-1419121-2	OMIH-SH-112LM	12	OMIH-SH-112LM	107-79006	

RELAY TYPE

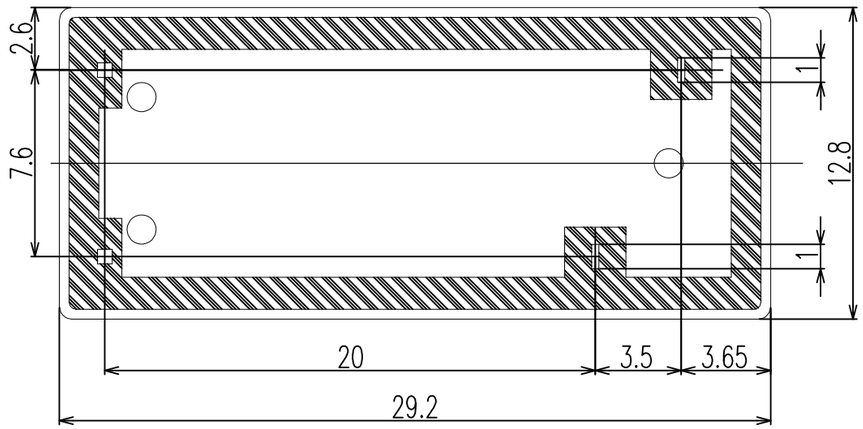

THIS DRAWING IS A CONTROLLED DOCUMENT.

DIMENSIONS: mm

TOLERANCES UNLESS OTHERWISE SPECIFIED:
0 PLC ±–
1 PLC ±–
2 PLC ±–
3 PLC ±–
4 PLC ±–
ANGLES ±–

MATERIAL –

FINISH –

DWN Davey Liu 25JUL2010
CHK Banghua Yu 26JUL2010
APVD Sunny Zhang 27JUL2010
PRODUCT SPEC —
APPLICATION SPEC —
WEIGHT 0.000000

TE Connectivity

NAME OMIH CUSTOMER DRAWING

SIZE	CAGE CODE	DRAWING NO	RESTRICTED TO
A3	00779	C-6-1419121-2	—

CUSTOMER DRAWING | SCALE 1:1 | SHEET 1 OF 1 | REV C2