THIS DRAWING IS UNPUBLISHED. RELEASED FOR PUBLICATION 20
© COPYRIGHT 20 BY - ALL RIGHTS RESERVED.

ITEM	DESCRIPTION	MATERIAL	OTHERS
1	FEMALE CONTACT	COPPER ALLOY	FLASH GOLD
2	HOUSING	NYLON	BLACK
3	COUPLING NUT	COPPER ALLOY	-
4	OVER-MOLDING	POLYURETHANE	BLUE
5	CABLE	-	-
6	LABEL	-	-

REVISIONS

P	LTR	DESCRIPTION	DATE	DWN	APVD
	A	INITIAL RELEASE	21AUG2015	HW	XX
	A1	ECR-16-010106	14JUL2016	HW	XX
	A2	ECR-16-015173, ADD NEW PN	29OCT2016	BP	CW
	B	ECR-18-019963	28DEC2018	G.W	C.W

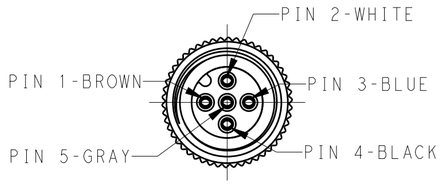

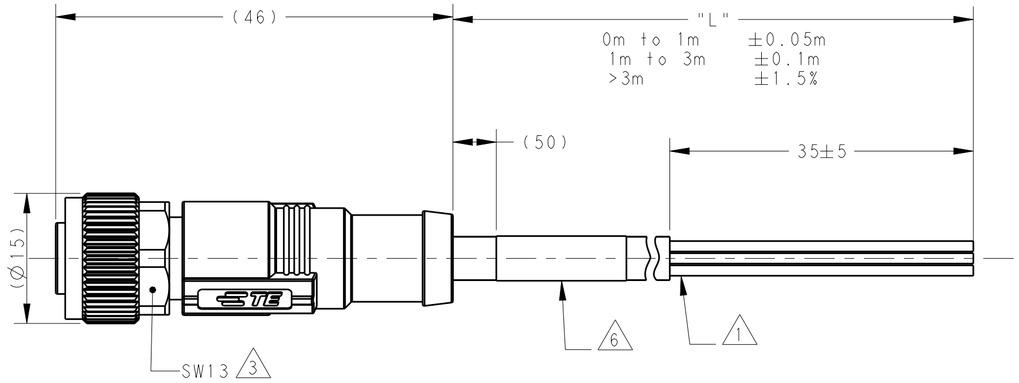

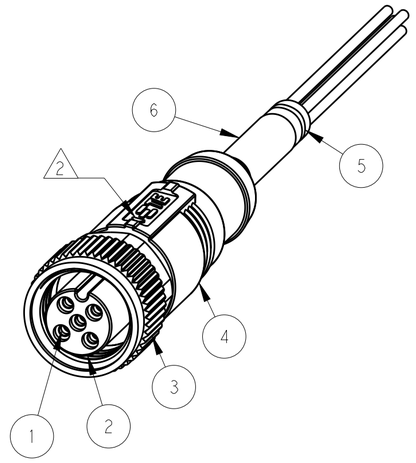

NOTE:

1. STRIP ALL THE INSULATION;
2. CODE POSITION INDICATOR;
3. RECOMMENDED TORQUE 0.6 Nm;
4. -**:CABLE LENGTH
   - -0.5:0.5M,
   - -1.0:1.0M,
   - -1.5:1.5M,
   - -3.0:3.0M,
   - -5.0:5.0M,
   - -7.0:7.0M,
   - -10.0:10.0M;
5. CABLE ASSEMBLY TO BE PACKAGED IN POLYBAGS;
6. LABEL CONTAINS: PN, DATE CODE...;
7. -00X: FOR CABLE LENGTH, SEE TABLE E AND REFER TO LENGH"L".

注释：

1. 全剥护套绝缘层；
2. CODE位置指示；
3. 推荐扭矩0.6 Nm；
4. -**：线缆长度
   - -0.5:0.5M,
   - -1.0:1.0M,
   - -1.5:1.5M,
   - -3.0:3.0M,
   - -5.0:5.0M,
   - -7.0:7.0M,
   - -10.0:10.0M;
5. 线缆组件塑料袋包装；
6. 标签包含： 产品编号， 日期代码...；
7. -00X：线缆长度，参考表2，参照长度"L".

TECHNICAL DATA	T41513X0002-00X	T41513X0003-00X	T41513X0004-00X	T41513X0005-00X
RATED VOLTAGE	250V			60V
RATED IMPULSE VOLTAGE	2500V			1500V
RATED CURRENT	4A			
POLLUTION DEGREE	3			
OVERVOLTAGE CATEGORY	II			
MATERIAL GROUP	II			
DEGREE OF PROTECTION	IP67			

PIN ARRANGEMENT
A-CODE

T41513X0002-00X	T41513X0003-00X	T41513X0004-00X
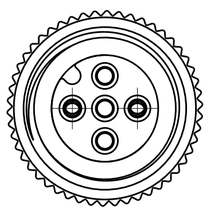	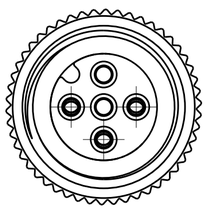	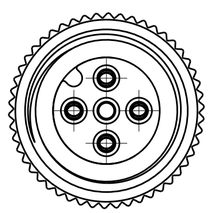
T41513X0005-00X		
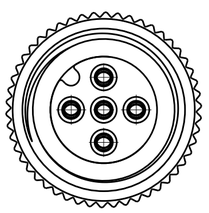		

CABLE CHARACTERISTIC	LENGTH "L"	CABLE TEMP. RANGE	JACKET COLOR	JACKET MATERIAL	TYPE	POS.	TE PN
WIRES: 0.50mm^2(20AWG) WIRE COLOR: WH/BR/BK/BL/GR OD: APPROX.4.5MM FOR 2P/3P APPROX.5.0MM FOR 4P/5P	STANDARD: -001:0.5 M -002:1.0 M -003:1.5 M -004:3.0 M -005:5.0 M -006:7.0 M -007:10.0 M CUSTOMIZATION: -XX0:XX.0 M -XX5:XX.5 M -99X:0.X M	FIXED: -10°C~+80°C FLXIBLE: -5°C~+80°C	BLACK	PVC (UL)	RPC-M12-FS-5CON-PVC-**S0.5 4	5	T4151350005-00X 7
					RPC-M12-FS-4CON-PVC-**S0.5 4	4	T4151350004-00X 7
					RPC-M12-FS-3CON-PVC-**S0.5 4	3	T4151350003-00X 7
					RPC-M12-FS-2CON-PVC-**S0.5 4	2	T4151350002-00X 7
WIRES: 0.34mm^2(22AWG) WIRE COLOR: WH/BR/BK/BL/GR OD: APPROX.4.5MM FOR 2P/3P APPROX.5.5MM FOR 4P/5P		FIXED: -40°C~+80°C FLXIBLE: -25°C~+80°C	GRAY	PUR (UL)	RPC-M12-FS-5CON-PUR-** 4	5	T4151320005-00X 7
					RPC-M12-FS-4CON-PUR-** 4	4	T4151320004-00X 7
					RPC-M12-FS-3CON-PUR-** 4	3	T4151320003-00X 7
					RPC-M12-FS-2CON-PUR-** 4	2	T4151320002-00X 7
		FIXED: -10°C~+80°C FLXIBLE: -5°C~+80°C	BLACK	PVC (UL)	RPC-M12-FS-5CON-PVC-** 4	5	T4151310005-00X 7
					RPC-M12-FS-4CON-PVC-** 4	4	T4151310004-00X 7
					RPC-M12-FS-3CON-PVC-** 4	3	T4151310003-00X 7
					RPC-M12-FS-2CON-PVC-** 4	2	T4151310002-00X 7

THIS DRAWING IS A CONTROLLED DOCUMENT.

DIMENSIONS: mm

TOLERANCES UNLESS OTHERWISE SPECIFIED:
0 PLC ±-
1 PLC ±-
2 PLC ±-
3 PLC ±-
4 PLC ±-
ANGLES ±-

MATERIAL - -
FINISH - -

DWN HAO WANG 11AUG2015
CHK KOBBY ZHAO 11AUG2015
APVD XIANG XU 11AUG2015
PRODUCT SPEC 108-106140
APPLICATION SPEC -
WEIGHT -

TE Connectivity

NAME M12X1 STRAIGHT RECEPTACLE, FREE END A-CODE, UNSHIELDED,

SIZE	CAGE CODE	DRAWING NO	RESTRICTED TO
A2	-	C-T41513X00XX00X	

CUSTOMER DRAWING | SCALE 1:1 | SHEET 1 OF 1 | REV B

1471-9 (3/13)