THIS DRAWING IS UNPUBLISHED. RELEASED FOR PUBLICATION -,- .
© COPYRIGHT - By - ALL RIGHTS RESERVED.

REVISIONS

| P | LTR | DESCRIPTION | DATE | DWN | APVD |
|---|---|---|---|---|---|
| | F1 | REVISED PER ECR-16-008419 | 14JUN2016 | BW | RS |

1 CONTINUOUS STRIP ON REELS

2 WIRE SIZE IS #14-#10 AWG

3 INSULATION RANGE IS 3.81-5.08 [.150-.200] DIA.

4 MATING TAB THK IS 0.81±0.025 [.032±.001]

5 PREPRODUCTION - FASR REQUIRED

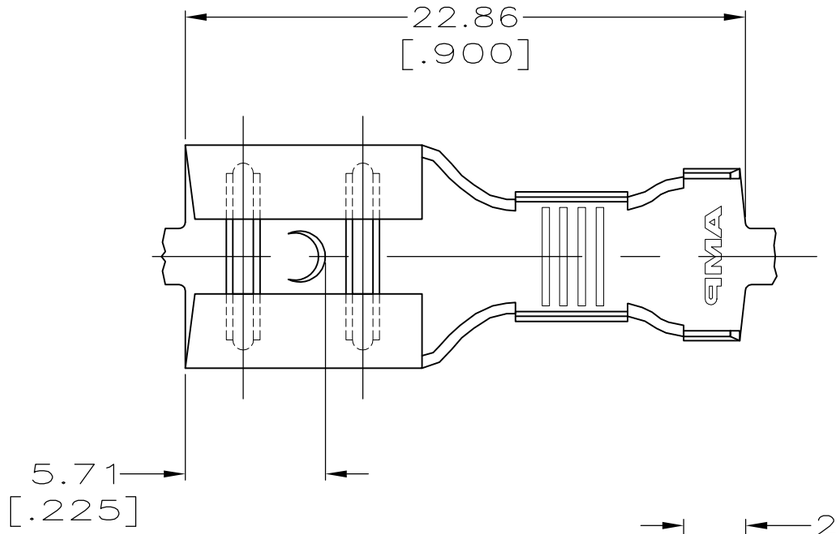


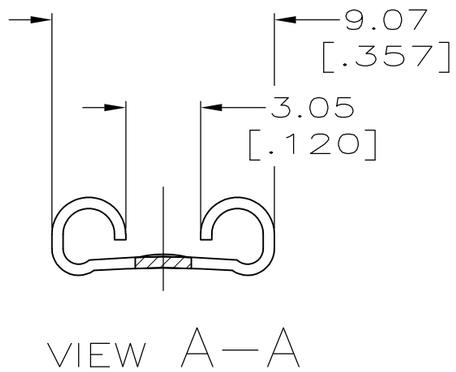


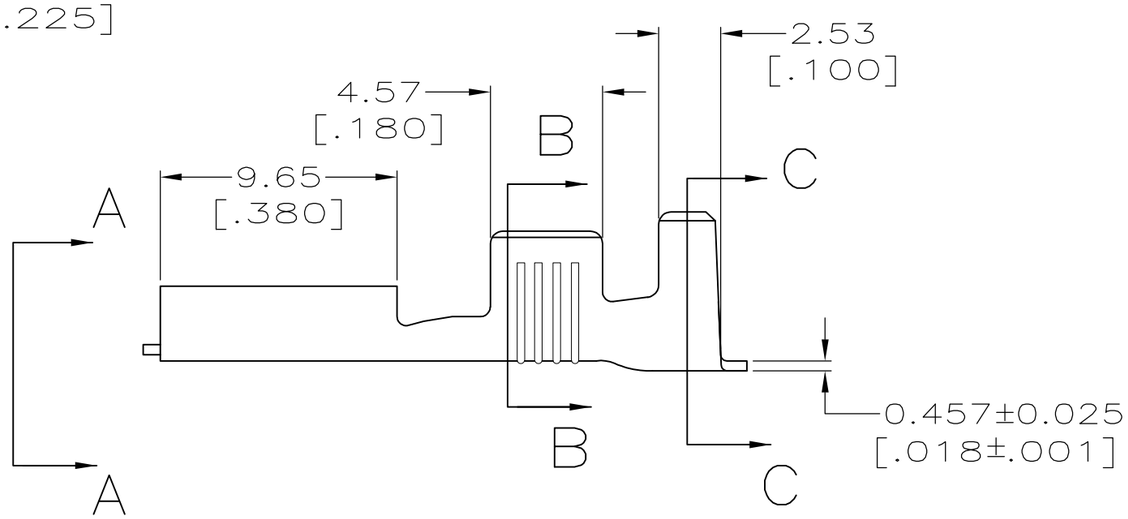


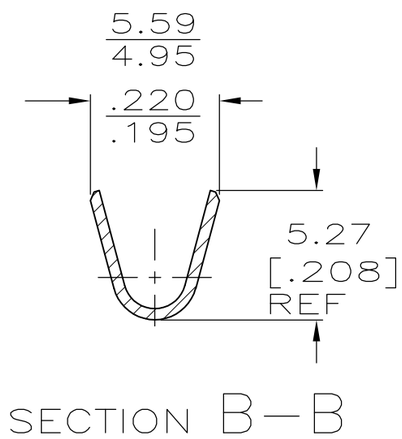


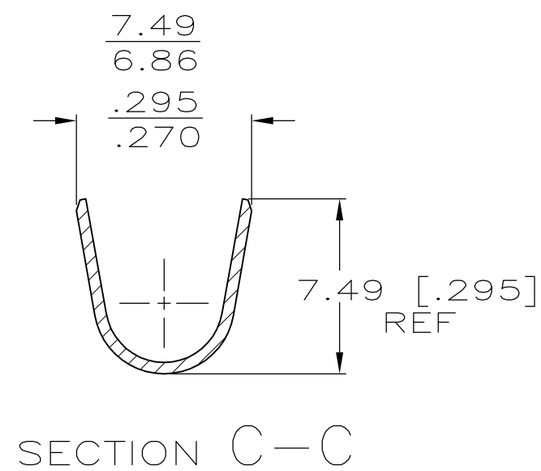


| | |
|---|---|
| TIN | 5 63820-3 |
| 0.00381 [.000150] MIN SILVER | 63820-1 |
| FINISH | PART NO. |

| TYPE | WIDTH | STRIP LENGTH ±0.38 ±[.015] | TYPE | WIDTH | ±0.051 ±[.002] HEIGHT | WIRE |
|---|---|---|---|---|---|---|
| F | 6.35 [.250] | 6.40 [.252] | F | 3.56 [.140] | 1.98 [.078] | [#14] |
| | | | | | 2.29 [.090] | [#12] |
| | | | | | 2.74 [.108] | [#10] |
| INSUL BARREL CRIMP | | WIRE BARREL CRIMP | | | | |

THIS DRAWING IS A CONTROLLED DOCUMENT.

DIMENSIONS: mm [INCHES]

TOLERANCES UNLESS OTHERWISE SPECIFIED:

| | |
|---|---|
| 0 PLC | ± - |
| 1 PLC | ± - |
| 2 PLC | ± 0.25 [.010] |
| 3 PLC | ± - |
| 4 PLC | ± - |
| ANGLES | ± - |

MATERIAL: BRASS

FINISH: SEE TABLE

| | | |
|---|---|---|
| DWN | JR RUTH | 11/3/94 |
| CHK | MS FEHER | 11/3/94 |
| APVD | J GILLESPIE | 11/3/94 |
| PRODUCT SPEC | — | |
| APPLICATION SPEC | 114-2036 | |
| WEIGHT | | |

TE Connectivity

NAME: RECEPTACLE, FASTON, 7.92 [.312] SERIES

| SIZE | CAGE CODE | DRAWING NO | RESTRICTED TO |
|---|---|---|---|
| A3 | 00779 | C-63820 | — |

CUSTOMER DRAWING

| SCALE | SHEET | REV |
|---|---|---|
| 4:1 | 1 OF 1 | F1 |