THIS DRAWING IS UNPUBLISHED. RELEASED FOR PUBLICATION .19 .
© COPYRIGHT 19 BY AMP INCORPORATED. ALL RIGHTS RESERVED.

LOC	DIST
AA	22

REVISIONS

P	LTR	DESCRIPTION	DATE	DWN	APVD
	C	REVISED; EC 0U1C-0037-99	24AUG99	DLD	CMB

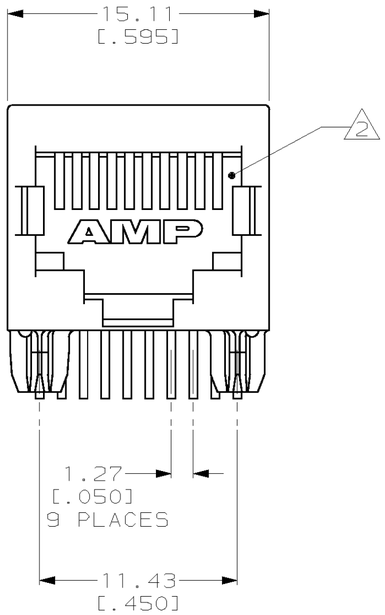

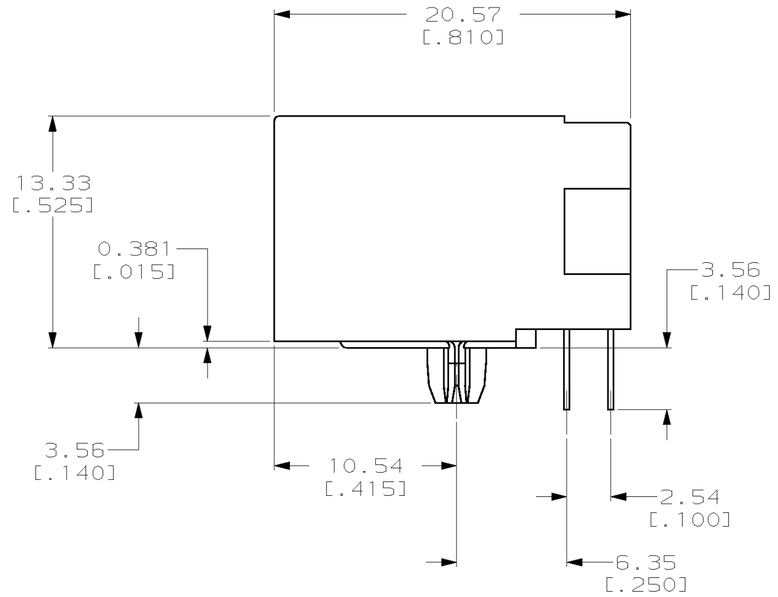

1. MATERIAL: HOUSING - HTN NYLON, BLACK, IR REFLOW COMPATIBLE, UL 94V-0.
TERMINALS - 0.33[.013] THICK PHOS BRONZE PLATED WITH 1.27µm[.000050] MINIMUM THICK HARD GOLD IN LOCALIZED AREA AND 3.81µm [.000150] MINIMUM THICK TIN-LEAD IN SOLDER AREA OVER 1.27µm[.000050] MINIMUM THICK NICKEL UNDERPLATE.

2. JACK CAVITY CONFORMS TO FCC RULES AND REGULATIONS, PART 68 SUBPART F.

3. DIMENSIONS ARE NOMINAL UNLESS OTHERWISE SPECIFIED.

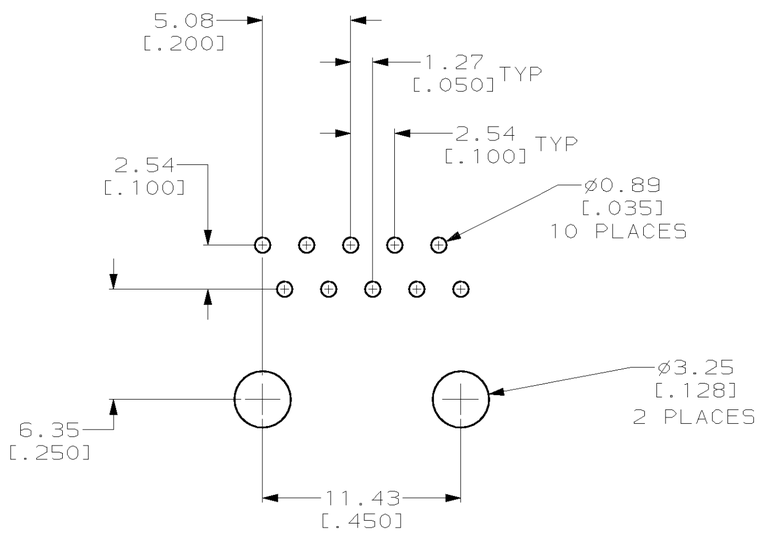

SUGGESTED PC BOARD LAYOUT
VIEW SHOWN IS TOP OF PC BOARD
(COMPONENT SIDE)

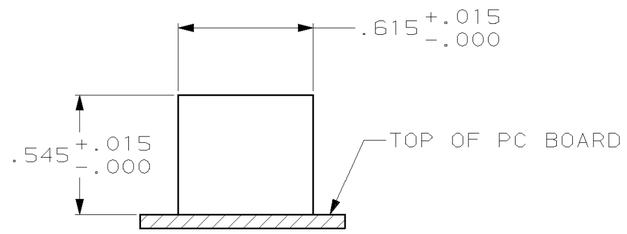

SUGGESTED PANEL CUTOUT

558065

558065-1
PART NUMBER

THIS DRAWING IS A CONTROLLED DOCUMENT FOR AMP INCORPORATED. IT IS SUBJECT TO CHANGE AND THE CONTROLLING ENGINEERING ORGANIZATION SHOULD BE CONTACTED FOR THE LATEST REVISION.

DIMENSIONS: mm [INCHES]

TOLERANCES UNLESS OTHERWISE SPECIFIED:
0 PLC ±-
1 PLC ±-
2 PLC ±-
3 PLC ±0.13[.005]
4 PLC ±-
ANGLES ±-

MATERIAL 1
FINISH 1

DWN	S. MAYBERRY	20 JUL 93
CHK	B. FOX	03 AUG 93
APVD	G. REED	03 AUG 93
PRODUCT SPEC	–	
APPLICATION SPEC	–	
WEIGHT	–	

CUSTOMER DRAWING

AMP Incorporated
Harrisburg, PA 17105-3608

NAME
MODULAR JACK ASSEMBLY,
10 POSITION, SIDE ENTRY, LOW PROFILE

SIZE	CAGE CODE	DRAWING NO
A2	00779	C-558065

SCALE	SHEET	OF	REV
4:1	1	1	C

AMP 1471-9 REV 09MAY94