THIS DRAWING IS UNPUBLISHED. RELEASED FOR PUBLICATION -,- .
© COPYRIGHT - By - ALL RIGHTS RESERVED.

LOC	DIST
AA	22

REVISIONS

P	LTR	DESCRIPTION	DATE	DWN	APVD
	A3	REVISED PER ECO-13-014513	03SEP2013	LL	SH

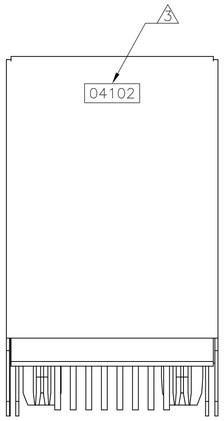

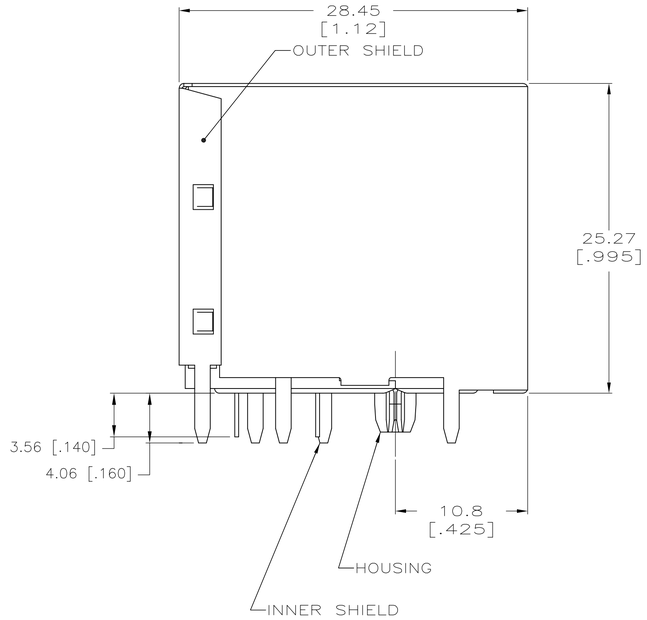

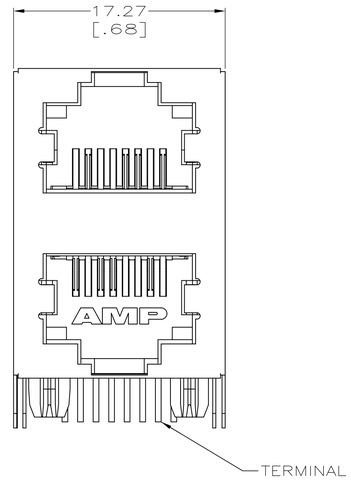

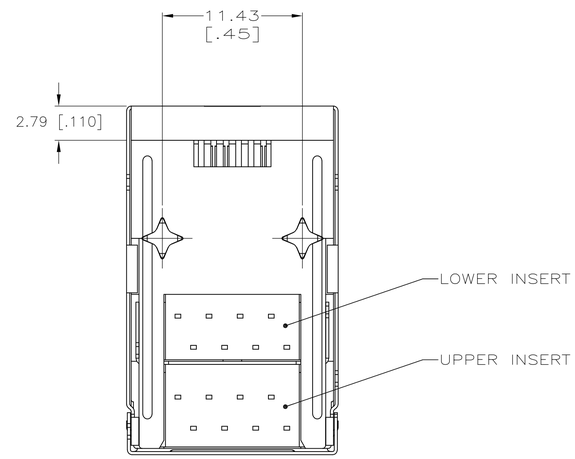

1. MATERIAL:
HOUSING – PCT POLYESTER, BLACK, UL94V-0.
OVERMOLDED TERMINAL ARRAY – PBT, BROWN.
TERMINALS – 0.33 [.013] THICK PHOS BRONZE PLATED WITH 1.27um [.000050] MIN THICK HARD GOLD IN LOCALIZED AREA AND 3.81um [.000150] MIN THICK MATTE TIN SOLDER AREA OVER 1.27um [.000050] MIN THICK NICKEL UNDERPLATE.
SHIELDS – 0.25 [.010] THICK COPPER ALLOY PLATED WITH 1.27 um [.000050] MINMUM NICKEL AND 2.03 um [.000080] MINIMUM HOT TIN DIP ON PCB GROUND TABS.

2. JACK CAVITY CONFORMS TO FCC RULES AND REGULATIONS, PART 68 SUBPART F.

3. DATE CODE LOCATED ON REAR OF PART APPROXIMATELY AS SHOWN:
FIRST 2 DIGITS ARE LAST 2 DIGITS OF YEAR,
SECOND 2 DIGITS ARE MANUFACTURING WORK WEEK,
LAST DIGIT IS DAY OF WEEK, WITH SUNDAY = 1.

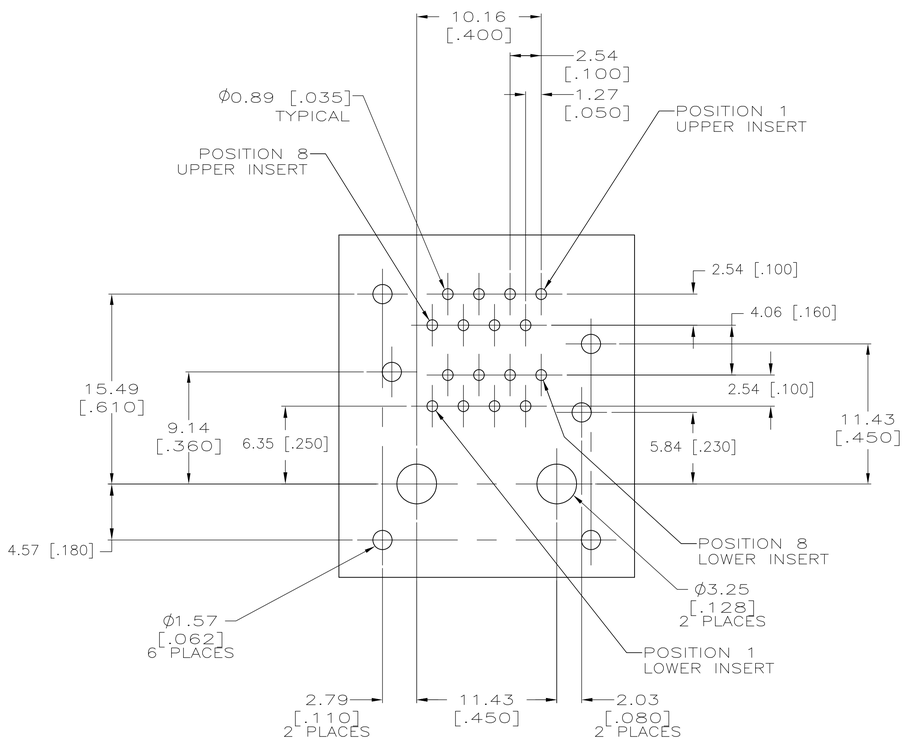

PC BOARD LAYOUT VIEWED FROM COMPONENT SIDE

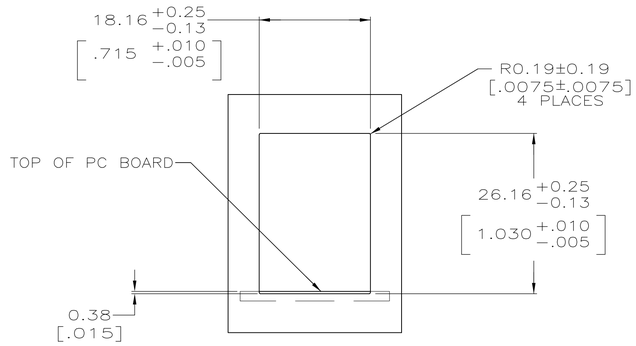

SUGGESTED PANEL CUTOUT DIMENSIONS
SCALE 2:1

5569380-1
PART NUMBER

THIS DRAWING IS A CONTROLLED DOCUMENT.

DIMENSIONS: mm [INCHES]

TOLERANCES UNLESS OTHERWISE SPECIFIED:
0 PLC ± –
1 PLC ± –
2 PLC ± 0.25[.01]
3 PLC ± 0.13[.005]
4 PLC ± –
ANGLES ± –

MATERIAL 1
FINISH 1

DWN 06JUN2005 L. VARELA – DOCK5
CHK 06JUN2005 J. WESTMAN
APVD 06JUN2005 S. FLICKINGER
PRODUCT SPEC 108-1163-2
APPLICATION SPEC 114-2048
WEIGHT –

TE Connectivity

NAME
STACKED MODULAR JACK ASSEMBLY,
2 X 1 PORT, 8 POSITION, SHIELDED,
PRINTED CIRCUIT BOARD GROUND, CATEGORY 5

SIZE	CAGE CODE	DRAWING NO	RESTRICTED TO
A1	00779	C-5569380	–

CUSTOMER DRAWING | SCALE 4:1 | SHEET 1 OF 1 | REV A3