THIS DRAWING IS UNPUBLISHED. RELEASED FOR PUBLICATION 20
© COPYRIGHT 20 BY - ALL RIGHTS RESERVED.

REVISIONS

P	LTR	DESCRIPTION	DATE	DWN	APVD
	B1	REVISED PER ECR-19-006849	01MAY2019	JS	DD
	B2	REVISED PER ECR-19-016909	04NOV2019	SB	DD

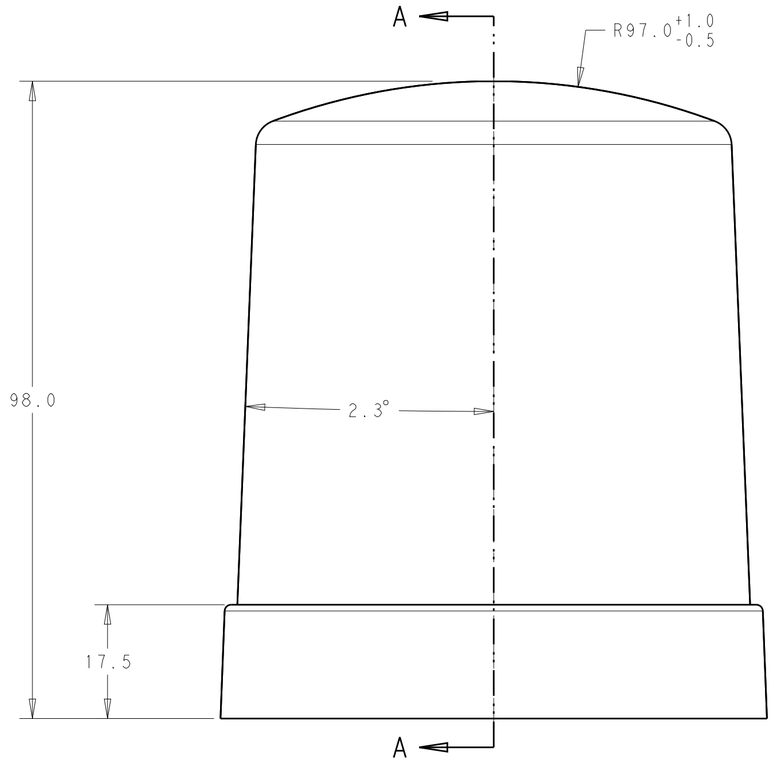

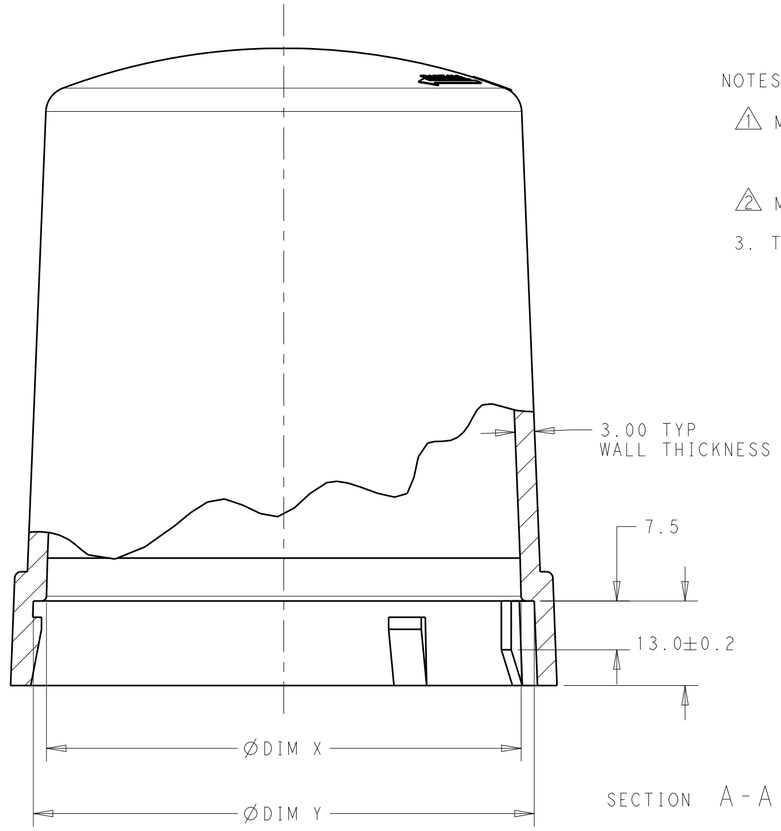

SECTION A-A

NOTES:

1. MATERIALS:
   HOUSING: POLYCARBONATE, UV 5VA RATED
   COLOR: SEE TABLE
2. MATING BASE TE P/N: 2213730-X
3. THIS PRODUCT HAS NOT COMPLETED VALIDATION TESTING.

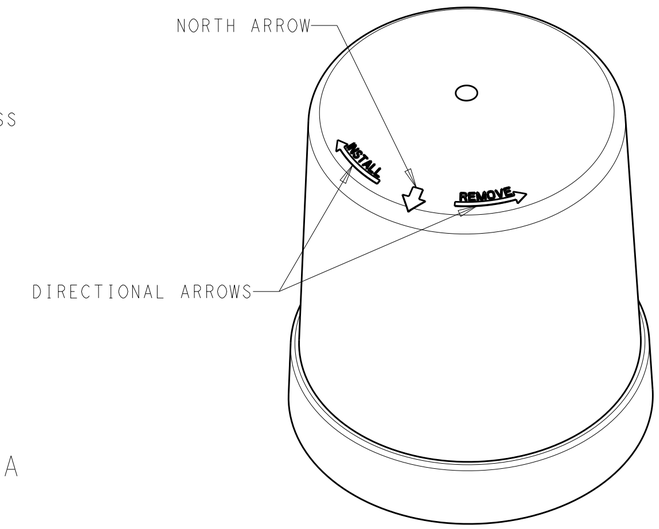

SCALE 1:1

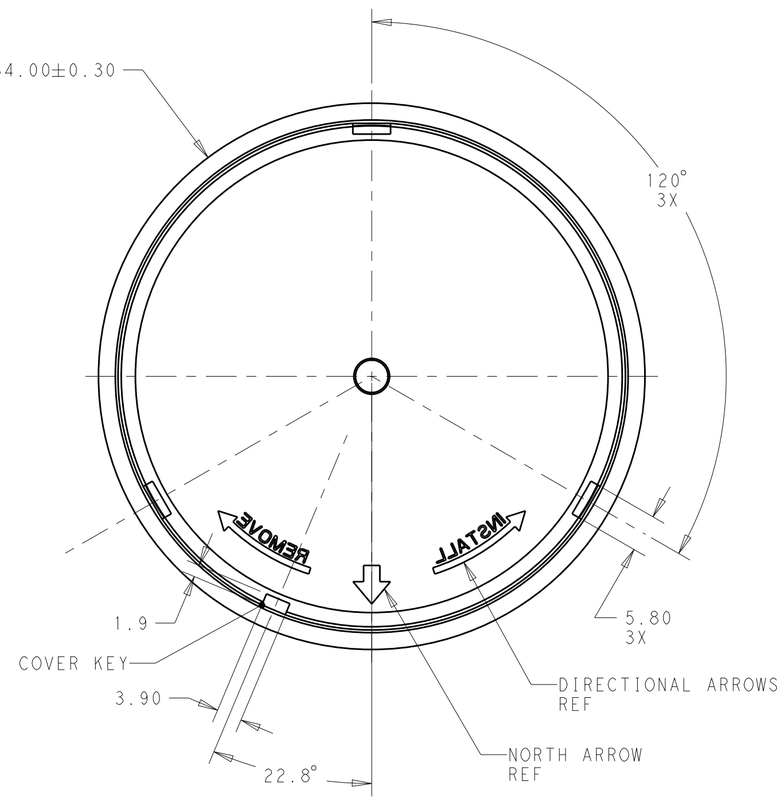

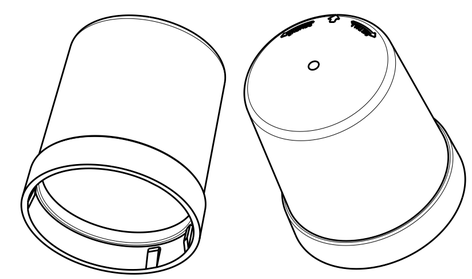

APPROX LIGHT TRANSMISSION	COLOR	DIM Y	DIM X	PART NO.
78%	TRANSPARENT CLEAR	Ø77.0	Ø73.0	1-2213748-1
26%	TRANSLUCENT GRAY	Ø77.0	Ø73.0	2213748-2
24%	TRANSPARENT SMOKE	Ø77.0	Ø73.0	2213748-1

THIS DRAWING IS A CONTROLLED DOCUMENT.

DIMENSIONS: mm

TOLERANCES UNLESS OTHERWISE SPECIFIED:
0 PLC ±-
1 PLC ±0.2
2 PLC ±0.13
3 PLC ±-
4 PLC ±-
ANGLES ±3°

MATERIAL - -
FINISH - -

DWN C.DAILY 30OCT2015
CHK F.HOWARD 30OCT2015
APVD -
PRODUCT SPEC 108-32125
APPLICATION SPEC 114-32159
WEIGHT -

TE Connectivity

NAME COVER, LIGHT CONTROLLER -

SIZE	CAGE CODE	DRAWING NO	RESTRICTED TO
A2	-	C-2213748	-

CUSTOMER DRAWING | SCALE 3:2 | SHEET 1 OF 1 | REV B2

1471-9 (3/13)