THIS DRAWING IS UNPUBLISHED. RELEASED FOR PUBLICATION 20
© COPYRIGHT 20 BY TYCO ELECTRONICS CORPORATION. ALL RIGHTS RESERVED.

LOC	DIST
AF	50

REVISIONS

P	LTR	DESCRIPTION	DATE	DWN	APVD
	C2	REVISED PER ECO-12-000092	04JAN13	JR	PD

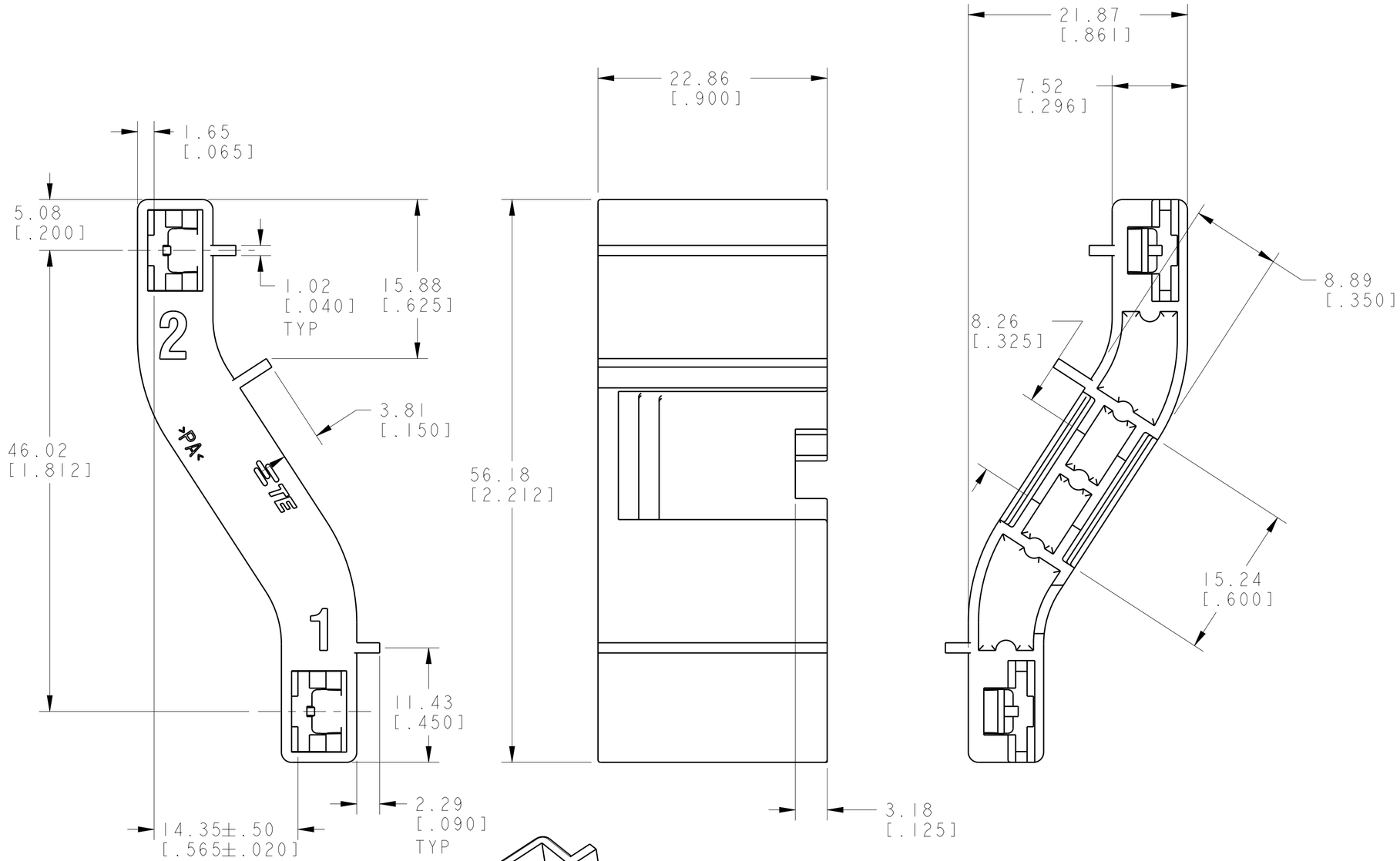

1. RECOMMENDED MATING TAB LENGTH IS 10.03 [.395] MIN.
2. RECOMMENDED CENTERLINE SPACING OF TABS TO BE ± 0.127 [.005].

3 MATERIAL: NYLON 66, UL94 V-2, ELECTRICAL RTI 125 °C MIN.

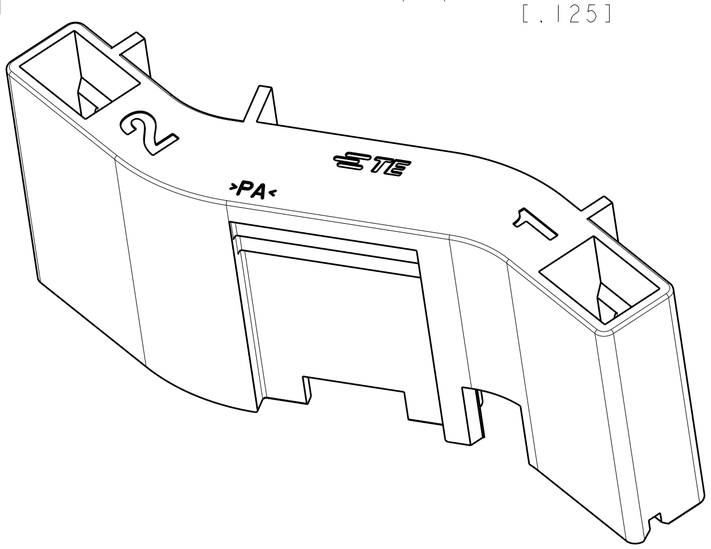

NATURAL	1738475-1
COLOR	PART NUMBER

THIS DRAWING IS A CONTROLLED DOCUMENT FOR TYCO ELECTRONICS CORPORATION. IT IS SUBJECT TO CHANGE AND THE CONTROLLING ENGINEERING ORGANIZATION SHOULD BE CONTACTED FOR THE LATEST REVISION.

DIMENSIONS: mm[INCHES]

TOLERANCES UNLESS OTHERWISE SPECIFIED:
0 PLC ±-
1 PLC ±-
2 PLC ±0.38 [.015]
3 PLC ±-
4 PLC ±-
ANGLES ±2°

MATERIAL 3 -
FINISH -

DWN MOHAN 06FEB06
CHK M.S. FEHER 10FEB2006
APVD P. DESANTIS 10FEB2006
PRODUCT SPEC -
APPLICATION SPEC -
WEIGHT -

Tyco Electronics
Tyco Electronics
Harrisburg, PA 17105-3608

NAME
HOUSING, RECEPTACLE
FASTON 6.35 [.250] SERIES
INFINITE SWITCH B

SIZE	CAGE CODE	DRAWING NO	RESTRICTED TO
A2	00779	C-1738475	-

Customer Drawing
SCALE 1:1 SHEET 1 OF 1 REV C2