## Keying Hardware — MIL-C-55302 Qualified

### External Keys

**Receptacle Key**
For use with Receptacles
**Kit Part Number 530341-3**
Kit includes 2 each of the following:
Keys, passivated stainless steel
**Part Number 530341-1**
**Military Part Number M55302/31-04**
Screws, #2-56 .250 [6.35] long

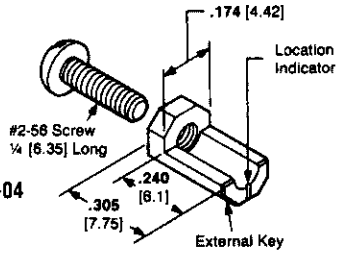


**Pin Header Key**
For use with 2-row Straddle Mount Pin Headers
**Kit Part Number 530341-4**[1]
Kit includes 2 each of the following:
Keys, passivated stainless steel
**Part Number 530341-1**
**Military Part Number M55302/31-04**
Rivets, nickel plated brass
**Part Number 530347-1**
**Military Part Number M55302/31-05**

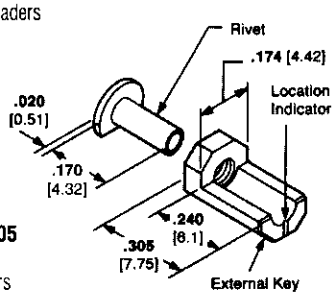


**Pin Header Key**
For use with 2-, 3-, and 4-row Pin Headers
**Kit Part Number 530341-5**[1]
Kit includes 2 each of the following:
Keys, passivated stainless steel
**Part Number 530341-1**
**Military Part Number M55302/31-04**
Rivets, nickel plated brass
**Part Number 530347-3**
**Military Part Number M55302/31-10**

[1]Rivet Clinching Tools:
2-Row Pin Headers—Tool Part Number 91117-1 (See instruction sheet 408-7803)
3-Row Pin Headers—Tool Part Number 91117-3 (See instruction sheet 408-6626)
4-Row Pin Headers—Tool Part Number 92-0800-003

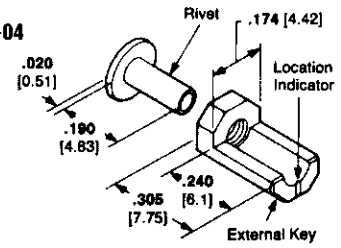


### Solid Keying Pin

Solid keying pins are for use on connectors when external keying is not used or on external keyed assemblies when more than 64 keying positions are required. Solid keying pins are not to be installed in the three dual positions at each end of the connector.

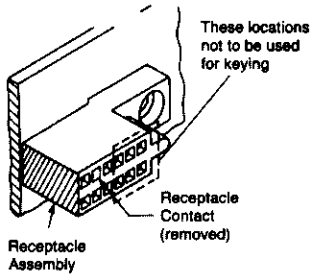


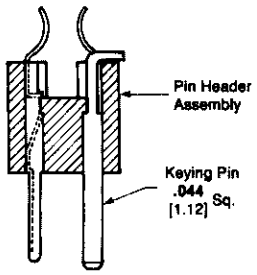


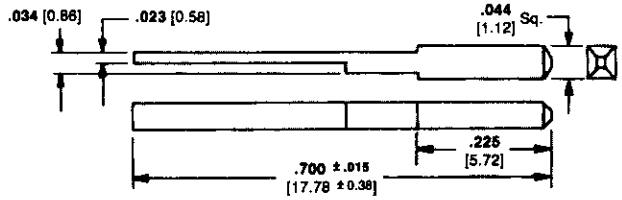


**Material:** Nickel plated brass
Part Number 530328-2
Military Part Number M55302/31-03

**Assembly Instructions:**
1. Remove pin and receptacle from desired keying locations.
2. Insert keying pin in pin header, secure by bending rear of pin over outside edge of housing, and trim excess material.

### Guide Keys

**Guide Keying Pin and Insert**
For use with 2-row Receptacles and 2-row Straddle Mount Pin Headers
**Kit Part Number 531715-1**[1]
Kit includes 2 each of the following:
Guide keying pin, passivated stainless steel
**Part Number 531713-1**
Nut, #2-56
**Part Number 23174-1**
Guide keying insert, passivated stainless steel
**Part Number 531714-1**
Rivet, nickel plated brass
**Part Number 530347-1**

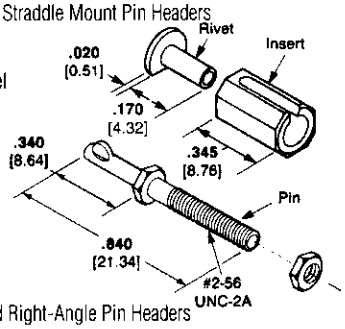


**Guide Keying Pin and Insert**
For use with 2- and 3-row Receptacles and Right-Angle Pin Headers
**Kit Part Number 531715-2**[1]
Kit includes 2 each of the following:
Guide keying pin, passivated stainless steel
**Part Number 531713-1**
Nut, #2-56
**Part Number 23174-1**
Guide keying insert, passivated stainless steel
**Part Number 531714-1**
Rivet, nickel plated brass
**Part Number 530347-3**

[1]Rivet Clinching Tools:
2-Row Pin Headers—Tool Part Number 91117-1 (See instruction sheet 408-7803)
3-Row Pin Headers—Tool Part Number 91117-4 (See instruction sheet 408-6627)

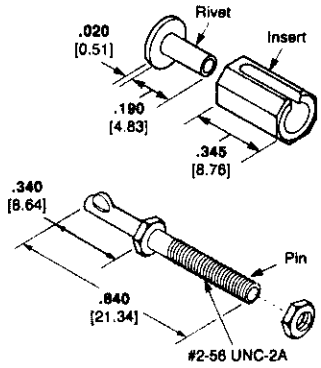


### Guide Pin/Insert

**Guide Pin**
Passivated stainless steel

| A | Part No. |
|---|---|
| .400 10.16 | 530345-1 |
| .680 17.27 | — |
| .750 19.05 | 530345-3 |

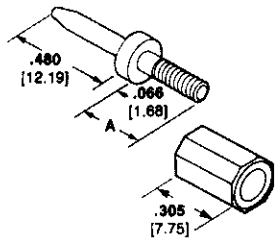


**Guide Insert**
Passivated stainless steel
**Part Number 530346-1**
(Consult Tyco Electronics for mounting recommendations)

### Keying Sleeve

Keying sleeves, like solid keying pins, are used as an alternative to external keys or when additional keying is required. When the keying sleeve is used on the pin header, the contact must be removed from the receptacle assembly and the cavity reamed to .062 [1.57] diameter.

**Material** — Nickel plated brass

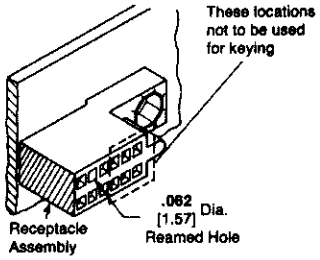


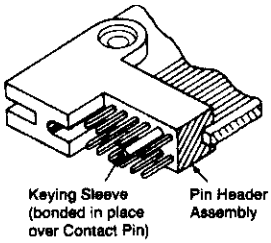


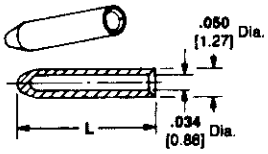


| L | MIL-Part No. M55302/ | Part No. |
|---|---|---|
| .305 7.75 | 31-01 | 583254-3 |
| .250 6.35 | 31-02 | 583254-4 |





Catalog 1308940
Revised 5-03

www.tycoelectronics.com

Dimensions are in inches and millimeters unless otherwise specified. Values in brackets are metric equivalents.

Dimensions are shown for reference purposes only. Specifications subject to change.

USA: 1-800-522-6752
Canada: 1-905-470-4425
Mexico: 01-800-733-8926
C. America: 52-55-5-729-0425
South America: 55-11-3611-1514
Hong Kong: 852-2735-1628
Japan: 81-44-844-8013
UK: 44-141-810-8967