THIS DRAWING IS UNPUBLISHED. RELEASED FOR PUBLICATION -,- .
© COPYRIGHT - TE Connectivity ALL RIGHTS RESERVED.

REVISIONS					
P	LTR	DESCRIPTION	DATE	DWN	APVD
	C1	REVISED PER ECO-09-024927	07NOV09	KK	AEG
	C2	REVISED PER ECO-16-018654	15MAY2017	RK	PO
	C3	REVISED PER ECO-17-007090	30JUN2017	RK	PO

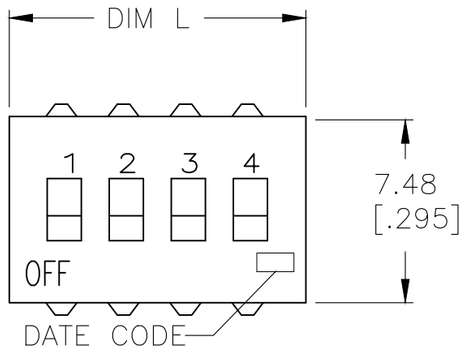

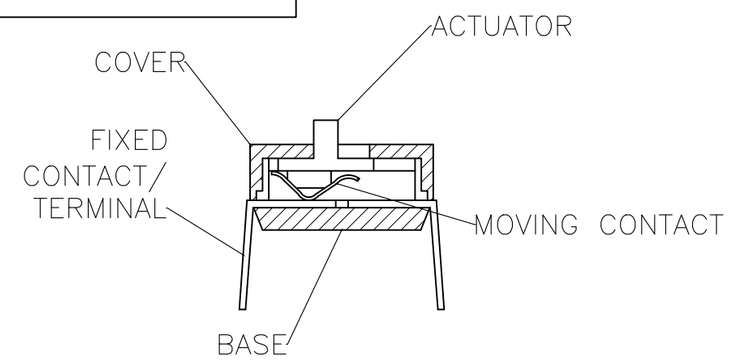

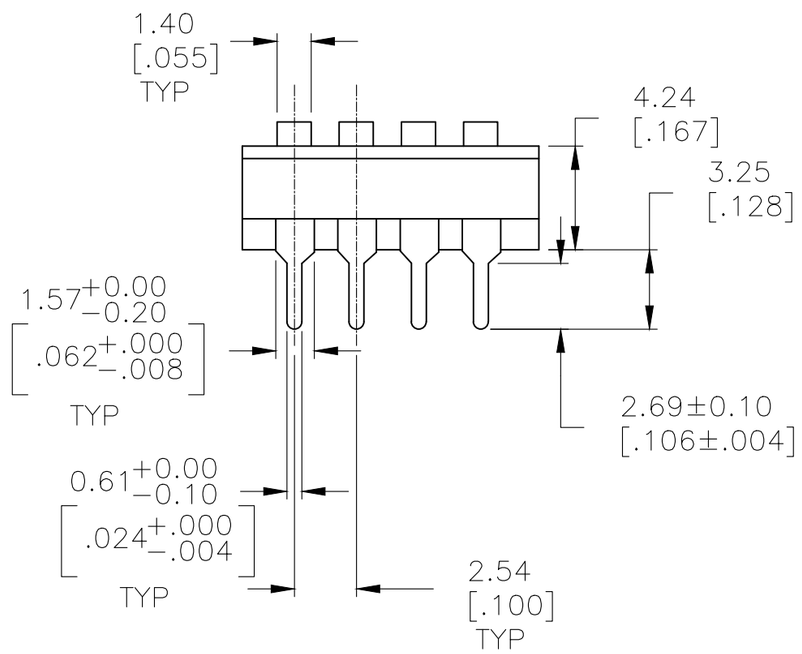

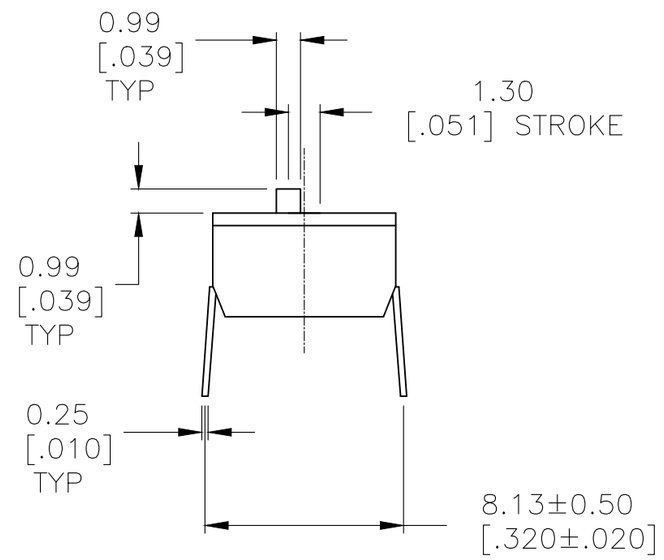

ARE

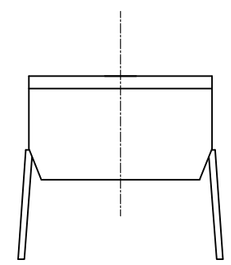

ARF

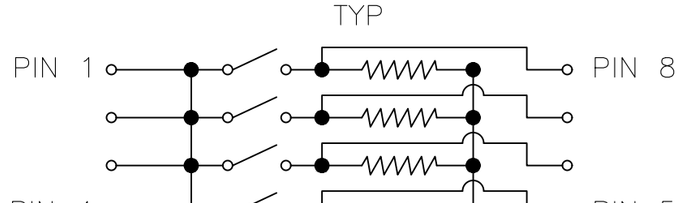

ELECTRICAL SCHEMATIC
ARF SERIES ONLY

RATED POWER	RESISTANCE	TOLERANCE	MAX VOLTAGE
125mW	3.3KΩ (RED) 10KΩ (GREEN)	±5% @ 85°C	24V

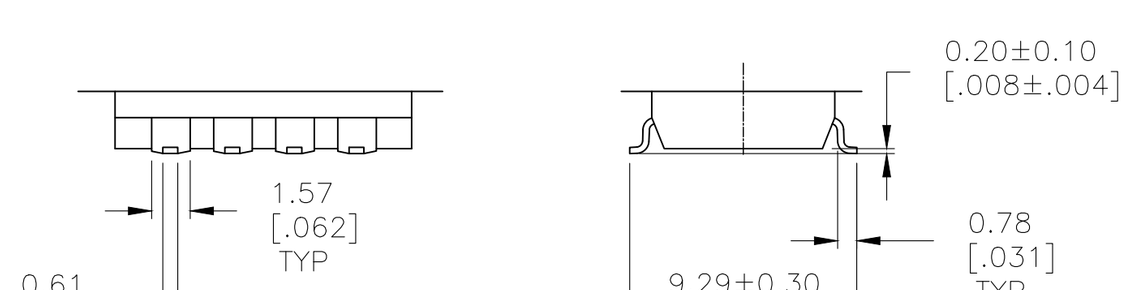

SURFACE MOUNT

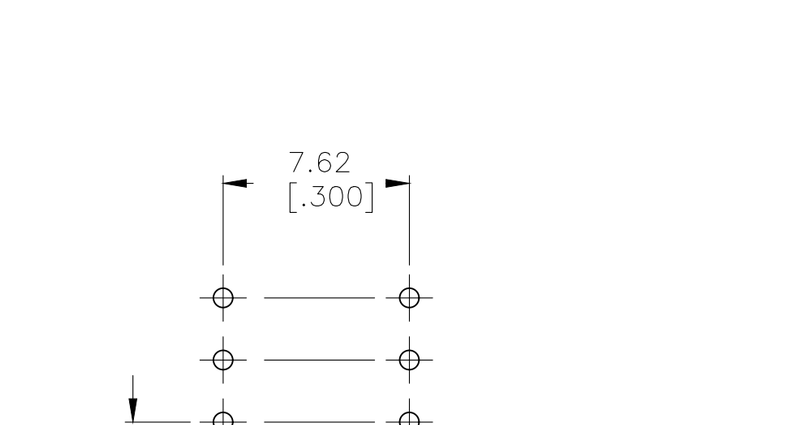

P.C. LAYUST
INSERT MOUNT

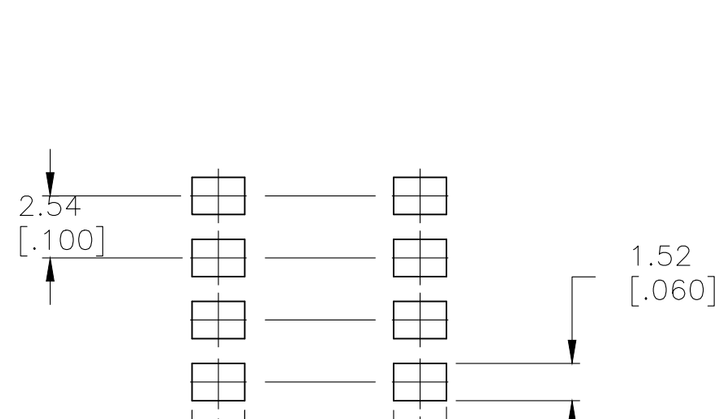

RECOMMENDED BOARD LAYOUT

Specifications:

Material
Base, PPS UL94V-0, BLACK
Cover, PPS UL94V-0, BLACK
Actuator, PA6T UL94V-0, WHITE
Fixed Contact/Terminal, Cu Alloy, Plate- Gold/Nickel
Moving Contact, Cu Alloy, Plate-Gold/Nickel

Electrical
Contact rating switching, .4VA @ 20V DC
Initial contact resistance, 50 milliohms max.
Insulation Resistance, 100 Megohms min. @ 100 VDC
Dielectric strength, 500 VAC RMS @ Sea level
Life, 5,000 cycles

Mechanical
Operating force, Less than 800 grams
Travel, .051

Environmental
Operating Temperature, -30 to +85 degrees C
Storage Temperature, -45 to + 100 degrees C
Cleaning, Aqueous or solvent
Solder heat resistance, 265 degrees C +/- 3 degrees C within 8 seconds +/- 2 seconds
Solderability per JIS-C-0050 & JIS-C-00053

Notes
1. ALL MATERIALS AND FINISHES SHALL COMPLY WITH EU DIRECTIVE 2002/95/EC OF 27JAN2003 (ROHS)
2. SWITCHES TO HAVE WHITE ACTUATORS AND MARKINGS
3. SWITCHES SUPPLIED IN THE "OFF" POSITION AND PACKAGED IN CLEAR TUBES TO ACCOMMODATE AUTO-INSERTION

4 SURFACE MOUNT

5 OBSOLETE PARTS: OBSOLETE CIS STREAMLINING PER D.RENAUD/D.SINISI

	DIM L	POLES	T&B P/N	PART NUMBER
OBSOLETE 5	22.30[.878]	8	ARF083.3K04	~~1-1825428-2~~
	22.30[.878]	8	ARF0810KT04	~~1-1825428-1~~
	1214[.478]	4	ARF043.3KT04	~~1-1825428-0~~
	1214[.478]	4	ARF043.3K04	~~1825428-9~~
	7.06[.278]	2	ARF023.3K04	~~1825428-8~~
	22.30[.878]	8	ARE0810KS04	4 ~~1825428-7~~
OBSOLETE	22.30[.878]	8	ARE0810K04	~~1825428-6~~
5 OBSOLETE	1214[.478]	4	ARE043.3K04	~~1825428-5~~
	22.30[.878]	8	ARF0810K04	1825428-4
5 OBSOLETE	1214[.478]	4	ARF0410K04	~~1825428-3~~
OBSOLETE	27.38[1.078]	10	ARE103.3K04	~~1825428-2~~
OBSOLETE	22.30[.878]	8	ARE083.3K04	~~1825428-1~~

THIS DRAWING IS A CONTROLLED DOCUMENT.

DIMENSIONS: mm [INCHES]

TOLERANCES UNLESS OTHERWISE SPECIFIED:
0 PLC ± -
1 PLC ± -
2 PLC ± 0.30[.012]
3 PLC ± -
4 PLC ± -
ANGLES ± -

MATERIAL -
FINISH -

DWN M.BINNER 27MAR06
CHK M SARVER 15FEB05
APVD M SARVER 15FEB05
PRODUCT SPEC —
APPLICATION SPEC —
WEIGHT

TE Connectivity

NAME DIP SWITCH, ARE/F SERIES

SIZE A2 | CAGE CODE 00779 | DRAWING NO C-1825428 | RESTRICTED TO —

CUSTOMER DRAWING | SCALE 4:1 | SHEET 1 OF 1 | REV C3

1825428

1471-9 (1/15)

Downloaded from Arrow.com.