THIS DRAWING IS UNPUBLISHED. RELEASED FOR PUBLICATION 20
© COPYRIGHT 20 BY TYCO ELECTRONICS CORPORATION. ALL RIGHTS RESERVED.

LOC	DIST
A	66

REVISIONS

P	LTR	DESCRIPTION	DATE	DWN	APVD
	C	ECR-18-008259	29MAY2018	LG	JD
	D	ECR-18-013514	24AUG2018	FZ	KZ
	E	ECR-18-018975	04DEC2018	FJ	KZ
	F	ECR-19-005517	05APR2019	LG	TE

PART NUMBER	REVISION	DESCRIPTION	FEED TYPE
2151234-2	F	FINE CRIMP HEIGHT ADJUST	PNEUMATIC
5-2151234-2	F	SEAL STRIPPER CRIMPER TERMINATING UNIT	PNEUMATIC
7-2151234-2	F	PNEUMATIC AND CRIMP TOOLING KIT	PNEUMATIC
7-2151234-7	A	CRIMP TOOLING KIT	-

ATLANTIC VERSION TERMINATOR INTERFACE ADAPTER

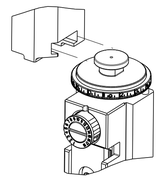

APPLICATOR DATA		
CRIMP	SIZE	TYPE
WIRE	2.03 mm [.080]	F
INSUL	6.35 mm [.250]	O
APPLICATOR INSTRUCTIONS 408-35042		

TERMINAL DATA: TE TERMINAL		TE CRIMP SPECIFICATION
TERMINAL NAME: STANDARD POWER TIMER CONTACT TYPE A		
WIRE STRIP LENGTH 4.40-5.00 mm [.173-.197 IN]	TERMINAL INSULATION DIAMETER RANGE	Ø 1.4-2.7mm
TERMINAL APPLICATION SPECIFICATION (A)114-18037	-	-
-	-	-

TERMINALS APPLIED 5 7

TE TERMINAL	TE TERMINAL	TE SEAL	TE SEAL	SEAL INSULATION DIAMETER RANGE
(A) 969040-1			(A) 963243-1	Ø1.4-2.1mm

TERMINAL DATA: TE TERMINAL		TE CRIMP SPECIFICATION
TERMINAL NAME: STANDARD POWER TIMER CONTACT TYPE A		
WIRE STRIP LENGTH 3.90-4.50 mm [.153-.177 IN]	TERMINAL INSULATION DIAMETER RANGE	Ø 1.4-2.7mm
TERMINAL APPLICATION SPECIFICATION (B)114-18388	-	-
-	-	-

TERMINALS APPLIED 5 7

TE TERMINAL	TE TERMINAL	TE SEAL	TE SEAL	SEAL INSULATION DIAMETER RANGE
(B)1241412-1	(B)1241412-3		(A) 963243-1	Ø1.4-2.1mm

WIRE SIZE	CRIMP HEIGHT mm [INCH]	CRIMP HEIGHT REFERENCE SETTING 4
1.00mm2	1.52+/-0.05 [.060+/-.002]	7.6
0.75mm2	1.43+/-0.05 [.056+/-.002]	8.5
0.50mm2	1.34+/-0.05 [.053+/-.002]	9.6

WIRE SIZE	CRIMP HEIGHT mm [INCH]	CRIMP HEIGHT REFERENCE SETTING 4
1.00mm2	1.54+/-0.05 [.061+/-.002]	7.6
0.75mm2	1.47+/-0.05 [.058+/-.002]	8.5
0.50mm2	1.43+/-0.05 [.056+/-.002]	9.6

1. RECOMMENDED SPARE PARTS
2. REFER TO SUPPLIED INSTRUCTION SHEET FOR CLEANING, LUBRICATION & STORAGE OF APPLICATOR.
3. APPLY PART NUMBER 1-23419-5 LOCTITE TO THREADS OF ITEM 180. APPLY PART NUMBER 2-23419-6 LOCTITE TO THREADS OF ITEM 242.
4. CRIMP HEIGHT REFERENCE SETTING WAS THE SETTING USED WHEN THE APPLICATOR WAS QUALIFIED AT THE FACTORY. ADJUSTMENT MAY BE NECESSARY WHEN RUNNING APPLICATOR IN THE FIELD.
5. TERMINAL PITCH NOT COMPATIBLE WITH MECHANICAL FEED.
6. APPLY TORQ-SEAL IN ALLEN SOCKET TO FILL HOLE AFTER FLAT HD HAS BEEN ADJUSTED TO CORRECT HEIGHT AT QUALIFICATION. APPLY #1-23419-5 LOC-TITE TO THREADS.
7. TERMINAL LUBRICANT IS RECOMMENDED.
8. UNLESS SPECIFIED OTHERWISE TORQUE VALUES SHALL BE USED PER DOCUMENT, 101-35000.

*WARNING
ON INSTALLATION, SET WIRE DISC TO CRIMP HEIGHT REFERENCE SETTING FOR LARGEST WIRE SIZE. CRIMP HEIGHT REFERENCE SETTINGS GREATER THAN THE VALUE SHOWN MAY CAUSE DAMAGE TO THE CRIMP TOOLING, REFER TO THE INSTRUCTION SHEET FOR PROPER SETUP AND ADJUSTMENTS.

ATLANTIC VERSION
Shown on sheets 1 of 4 & 2 of 4
(Pacific version shown on sheets 3 of 4 & 4 of 4)

-77	-72	-52	-2	PART NO	DESCRIPTION	ITEM NO
-	-	1	-	1803515-3	RAM ASSEMBLY, SF ATLANTIC	293
-	-	1	-	2-1803583-1	APPLICATOR BASIC ASSEMBLY, SF	292
-	1	1	1	2119641-1	FEED CAM, AIR FEED	248
-	1	1	1	2119082-8	CAM, SNAIL, INSULATION ADJUSTMENT	244
-	1	1	1	2079764-1	WASHER, WAVE SPRING, CREST-TO-CREST	243
3 -	1	1	1	2119083-1	RETAINER, INSULATION DIAL	242
-	1	1	1	7-18023-7	SCR, SKT HD CAP M3 X 4.0	241
-	1	1	1	2844940-1	AIR FEED MODULE	238
-	-	1	-	4-1722335-3	STRIPPER, SIDE FEED	182
-	-	1	-	1-5018030-0	NUT, HEX, REG, RoHS, M3.5	181
3 -	-	1	-	2-1752354-2	STANDOFF,HOLD-DOWN	180
-	-	1	-	993111-1	PIN, SLOTTED SPRING 3.0 X 20.0	177
-	-	1	-	5-22280-0	SPRING, COMPRESSION	176
-	-	1	-	1752353-3	GUIDE PIN,HOLDDOWN	175
-	-	1	-	1901680-2	GUIDE PIN,HOLDDOWN	174
-	REF	REF	REF	994970-2	COUNTER, MAGNETIC	164
7 -	1	1	1	2119955-1	ASSY, LUBRICATOR, SIDE FEED	113
-	1	1	1	2844908-1	SCREW, LOCKING	99
-	1	1	1	2844907-1	POST, LOCKING	98
-	1	1	1	455888-5	SPACER, CRIMPER	82
-	1	1	1	1803607-3	DOCUMENTATION PACKAGE	71
-	1	1	1	2119740-1	TAG,IDENTIFICATION	67
-	2	2	2	2168078-1	SCREW, DRIVE, RH, RoHS, 2 x .188	66
-	1	1	1	2168083-2	SCR, SKT HD CAP, RoHS, M4 X 8.0	60
-	1	1	1	5-18022-5	SCR, HEX HD CAP, M4 X 6.0	59
6 -	1	1	1	985575-3	SCR, FLT SKT HD CAP M3 X 10.0	57
-	1	1	1	1338685-1	PAWL, FEED	56
-	4	4	4	2168083-3	SCR, SKT HD CAP, RoHS, M4 X 12.0	54
-	2	2	2	1-2168083-0	SCR, SKT HD CAP, RoHS, M4 X 10	53
-	1	1	1	1803382-2	HOLD DOWN, SPRING LOADED	50
-	1	1	1	18023-9	SCR, SKT HD CAP M4 X 6.0	49
-	1	-	1	1803583-9	APPLICATOR BASIC ASSEMBLY, SF	46
-	1	-	1	1803515-1	RAM ASSEMBLY, SF ATLANTIC	44
-	1	1	1	1803602-1	SCR, BHSC, RoHS (M8 X 25)	41
-	1	1	1	1-1752356-1	SUPPORT, TERMINAL	34
-	2	2	2	2079383-5	SCR, BHSC, RoHS (M4 X 20)	33
-	2	2	2	3-2844962-2	SPACER, CYLINDRICAL, STRIP GUIDE	30
-	1	1	1	2844992-2	ASSEMBLY, STRIP GUIDE	29
-	1	1	1	455888-3	SPACER, CRIMPER	28
-	1	1	1	1320928-6	STRIP GUIDE	24
-	1	-	1	2168083-2	SCR, SKT HD CAP, RoHS, M4 X 8.0	21
-	2	1	2	1-18028-2	WASHER, FLAT, REG M4	20
-	1	-	1	2119533-1	STRIPPER, SIDE FEED	19
1 -	1	1	1	2119806-1	INSERT, SHEAR	13
-	1	1	1	3-22280-3	SPRING, COMPRESSION	12
-	1	1	1	1-356885-4	STOP, SHEAR	11
1 -	1	1	1	2119805-1	SHEAR HOLDER, FRONT	10
1 -	1	1	1	318707-1	FLOATING SHEAR, FRONT	9
1 1	2	1	1	4-1333204-2	ANVIL, COMBINATION	8
-	1	1	1	2119781-1	DEPRESSOR, SHEAR	5
-	1	1	1	238011-2	BLOCK, CRIMPER SPACER	4
1 1	2	1	1	1633996-6	CRIMPER, INSULATION SPECIAL	3
-	1	1	1	455888-9	SPACER, CRIMPER	2
1 1	2	1	1	1-456405-6	CRIMPER, WIRE PREMIUM	1

THIS DRAWING IS A CONTROLLED DOCUMENT FOR TYCO ELECTRONICS CORPORATION. IT IS SUBJECT TO CHANGE AND THE CONTROLLING OPERATING ORGANIZATION SHOULD BE CONTACTED FOR THE LATEST REVISION.

DIMENSIONS: mm

TOLERANCES UNLESS OTHERWISE SPECIFIED:
0 PLC ±
1 PLC ±
2 PLC ±
3 PLC ±
4 PLC ±
ANGLES ±

MATERIAL - -
FINISH - -

DWN	L.ZHANG	22SEP2011
CHK	L.ZHANG	22SEP2011
APVD	S.XI	22SEP2011
PRODUCT SPEC	-	
APPLICATION SPEC	-	
WEIGHT	-	

TE Connectivity
Harrisburg, PA 17105-3608

NAME: Ocean Side Feed Applicator -

SIZE	CAGE CODE	DRAWING NO	RESTRICTED TO
A1	00779	C-2151234	-

Customer Accessible Production Drawing | SCALE 1:2 | SHEET 1 OF 4 | REV F

SHEETS 3 & 4 ARE NOT REQUIRED FOR ATLANTIC VERSION

THIS DRAWING IS UNPUBLISHED. RELEASED FOR PUBLICATION 20
© COPYRIGHT 20 BY TYCO ELECTRONICS CORPORATION. ALL RIGHTS RESERVED.

LOC	DIST
A	66

REVISIONS

P	LTR	DESCRIPTION	DATE	DWN	APVD
	-	SEE SHEET 1	-	-	-

FEED TYPE

PNEUMATIC

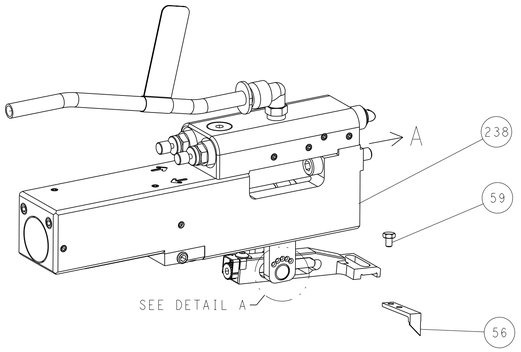

FEED SPRING SETTING POSITION
(SHOWN FROM REAR SIDE)

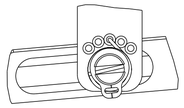

DETAIL A

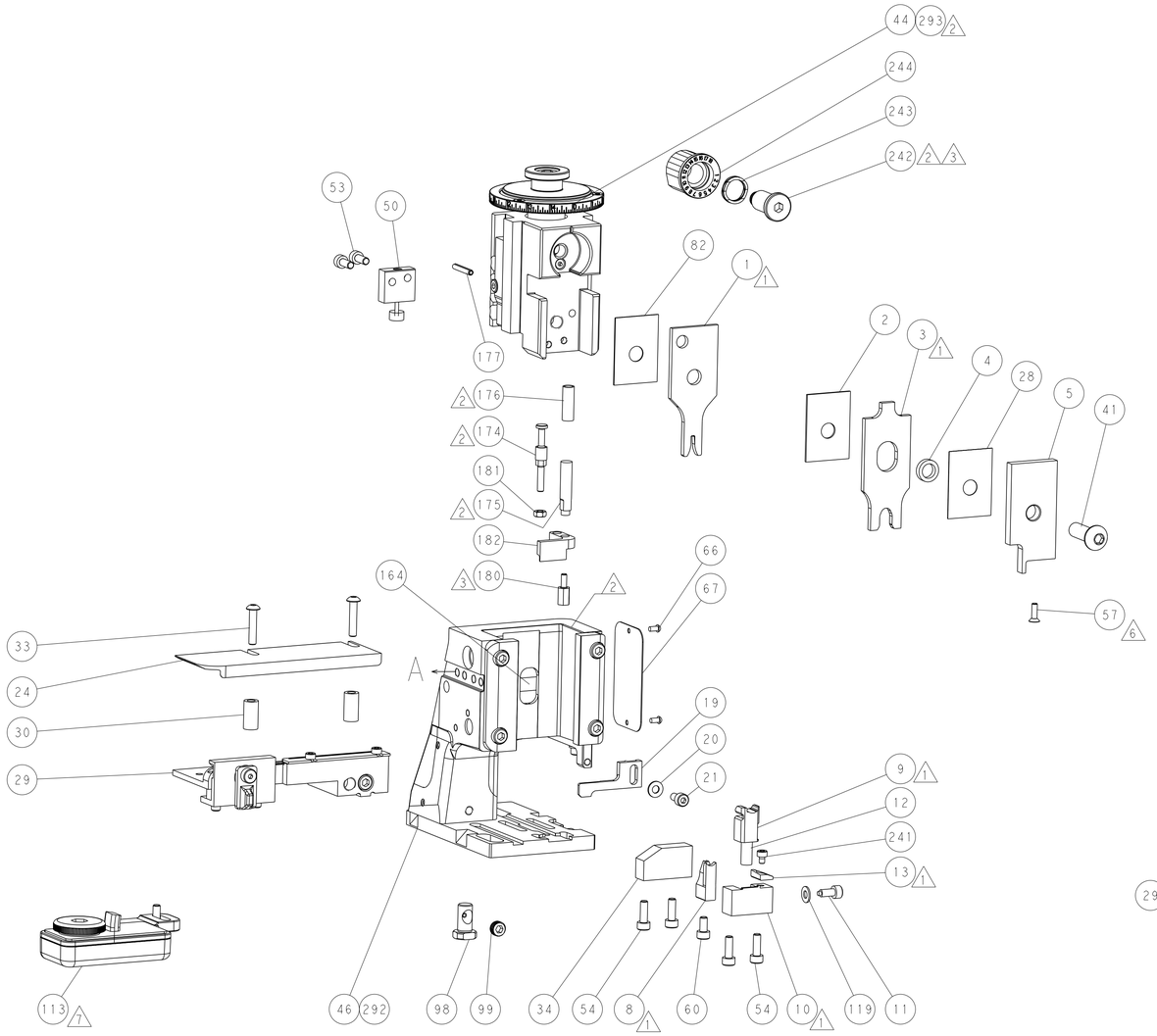

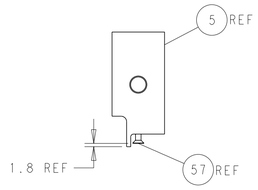

SHEAR DEPRESSOR DETAIL

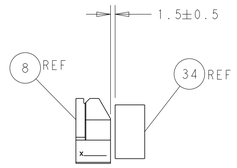

TERMINAL SUPPORT LOCATION

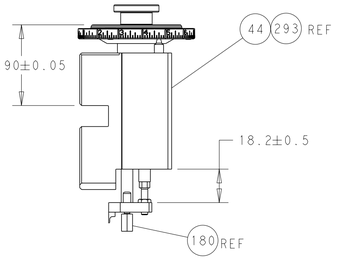

RAM AND HOLDDOWN SET-UP

ITEM 30 LOCATED AT
FRONT HOLES

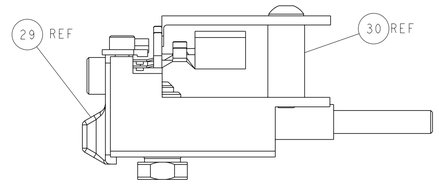

FEED TRACK POSITION
GUIDE BY INSULATION BARREL

CAM POSITION

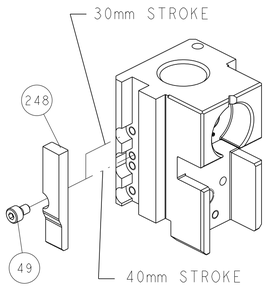

AIR FEED

ATLANTIC VERSION

Shown on sheets 1 of 4 & 2 of 4
(Pacific version shown on sheets 3 of 4 & 4 of 4)

THIS DRAWING IS A CONTROLLED DOCUMENT FOR TYCO ELECTRONICS CORPORATION. IT IS SUBJECT TO MODIFICATION. ANY QUESTIONS SHOULD BE DIRECTED TO THE ORGANIZATION SHOULD BE CONTACTED FOR THE LATEST REVISION.

DIMENSIONS: mm

TOLERANCES UNLESS OTHERWISE SPECIFIED:
0 PLC ±
1 PLC ±
2 PLC ±
3 PLC ±
4 PLC ±
ANGLES ±

MATERIAL - - -
FINISH - -

DWN	L.ZHANG	22SEP2011
CHK	L.ZHANG	22SEP2011
APVD	S.XI	22SEP2011
PRODUCT SPEC	-	
APPLICATION SPEC	-	
WEIGHT	-	

TE Connectivity
Harrisburg, PA 17105-3608

NAME: Ocean Side Feed Applicator -

SIZE	CAGE CODE	DRAWING NO	RESTRICTED TO
A1	00779	C-2151234	-

Customer Accessible Production Drawing | SCALE 1:2 | SHEET 2 OF 4 | REV F

SHEETS 3 & 4 ARE NOT REQUIRED FOR ATLANTIC VERSION

THIS DRAWING IS UNPUBLISHED. RELEASED FOR PUBLICATION 20
© COPYRIGHT 20 BY TYCO ELECTRONICS CORPORATION. ALL RIGHTS RESERVED.

LOC	DIST
A	66

REVISIONS

P	LTR	DESCRIPTION	DATE	DWN	APVD
	-	SEE SHEET 1	-	-	-

PART NUMBER	REVISION	DESCRIPTION	FEED TYPE
2-2151234-2	F	FINE CRIMP HEIGHT ADJUST	PNEUMATIC
7-2151234-7	A	CRIMP TOOLING KIT	-

PACIFIC VERSION TERMINATOR INTERFACE ADAPTER

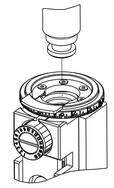

APPLICATOR DATA		
CRIMP	SIZE	TYPE
WIRE	2.03 mm [.080]	F
INSUL	6.35 mm [.250]	O
APPLICATOR INSTRUCTIONS 408-35042		

TERMINAL DATA: TE TERMINAL		TE CRIMP SPECIFICATION
TERMINAL NAME: STANDARD POWER TIMER CONTACT TYPE A		
WIRE STRIP LENGTH 4.40-5.00 mm [.173-.197 IN]	TERMINAL INSULATION DIAMETER RANGE Ø 1.4-2.7mm	
TERMINAL APPLICATION SPECIFICATION	(A)114-18037	- - - -

TERMINALS APPLIED 5 7

TE TERMINAL	TE TERMINAL	TE SEAL	TE SEAL	SEAL INSULATION DIAMETER RANGE
(A) 969040-1			(A) 963243-1	Ø1.4-2.1mm

TERMINAL DATA: TE TERMINAL		TE CRIMP SPECIFICATION
TERMINAL NAME: STANDARD POWER TIMER CONTACT TYPE A		
WIRE STRIP LENGTH 3.90-4.50 mm [.153-.177 IN]	TERMINAL INSULATION DIAMETER RANGE Ø 1.4-2.7mm	
TERMINAL APPLICATION SPECIFICATION	(B)114-18388	- - - -

TERMINALS APPLIED 5 7

TE TERMINAL	TE TERMINAL	TE SEAL	TE SEAL	SEAL INSULATION DIAMETER RANGE
(B)1241412-1	(B)1241412-3		(A) 963243-1	Ø1.4-2.1mm

WIRE SIZE	CRIMP HEIGHT mm [INCH]	CRIMP HEIGHT REFERENCE SETTING 4
1.00mm2	1.52+/-0.05 [.060+/-.002]	7.6
0.75mm2	1.43+/-0.05 [.056+/-.002]	8.5
0.50mm2	1.34+/-0.05 [.053+/-.002]	9.6

WIRE SIZE	CRIMP HEIGHT mm [INCH]	CRIMP HEIGHT REFERENCE SETTING 4
1.00mm2	1.54+/-0.05 [.061+/-.002]	7.6
0.75mm2	1.47+/-0.05 [.058+/-.002]	8.5
0.50mm2	1.43+/-0.05 [.056+/-.002]	9.6

1. RECOMMENDED SPARE PARTS
2. REFER TO SUPPLIED INSTRUCTION SHEET FOR CLEANING, LUBRICATION & STORAGE OF APPLICATOR.
3. APPLY PART NUMBER 2-23419-6 LOCTITE TO THREADS OF ITEM 242.
4. CRIMP HEIGHT REFERENCE SETTING WAS THE SETTING USED WHEN THE APPLICATOR WAS QUALIFIED AT THE FACTORY. ADJUSTMENT MAY BE NECESSARY WHEN RUNNING APPLICATOR IN THE FIELD.
5. TERMINAL PITCH NOT COMPATIBLE WITH MECHANICAL FEED.
6. APPLY TORQ-SEAL IN ALLEN SOCKET TO FILL HOLE AFTER FLAT HD HAS BEEN ADJUSTED TO CORRECT HEIGHT AT QUALIFICATION. APPLY #1-23419-5 LOC-TITE TO THREADS.
7. TERMINAL LUBRICANT IS RECOMMENDED.
8. UNLESS SPECIFIED OTHERWISE TORQUE VALUES SHALL BE USED PER DOCUMENT, 101-35000.

*WARNING
ON INSTALLATION, SET WIRE DISC TO CRIMP HEIGHT REFERENCE SETTING FOR LARGEST WIRE SIZE. CRIMP HEIGHT REFERENCE SETTINGS GREATER THAN THE VALUE SHOWN MAY CAUSE DAMAGE TO THE CRIMP TOOLING, REFER TO THE INSTRUCTION SHEET FOR PROPER SETUP AND ADJUSTMENTS.

-	1	2119082-8	CAM, SNAIL, INSULATION ADJUSTMENT	244
-	1	2079764-1	WASHER, WAVE SPRING, CREST-TO-CREST	243
3 -	1	2119083-1	RETAINER, INSULATION DIAL	242
-	1	7-18023-7	SCR, SKT HD CAP M3 X 4.0	241
-	1	2844940-1	AIR FEED MODULE	238
-	REF	994970-2	COUNTER, MAGNETIC	164
-	1	2119641-2	FEED CAM, AIR FEED	151
-	1	2168083-8	SCR, SKT HD CAP, RoHS, M4 X 16	144
-	4	2168083-9	SCR, SKT HD CAP, RoHS, M4 X 20	143
-	1	1-1803583-0	APPLICATOR BASIC ASSEMBLY, SF	141
-	1	1803516-1	RAM ASSEMBLY, SF PACIFIC	140
7 -	1	2119955-1	ASSY, LUBRICATOR, SIDE FEED	113
-	1	2844908-1	SCREW, LOCKING	99
-	1	2844907-1	POST, LOCKING	98
-	1	455888-5	SPACER, CRIMPER	82
-	1	1803607-3	DOCUMENTATION PACKAGE	71
-	1	2119740-1	TAG,IDENTIFICATION	67
-	2	2168078-1	SCREW, DRIVE, RH, RoHS, 2 x .188	66
-	1	5-18022-5	SCR, HEX HD CAP, M4 X 6.0	59
6 -	1	985575-3	SCR, FLT SKT HD CAP M3 X 10.0	57
-	1	1338685-1	PAWL, FEED	56
-	2	1-2168083-0	SCR, SKT HD CAP, RoHS, M4 X 10	53
-	1	1803382-2	HOLD DOWN, SPRING LOADED	50
-	1	18023-9	SCR, SKT HD CAP M4 X 6.0	49
-	1	1803602-1	SCR, BHSC, RoHS (M8 X 25)	41
-	1	1-1752356-1	SUPPORT, TERMINAL	34
-	2	2079383-5	SCR, BHSC, RoHS (M4 X 20)	33
-	2	3-2844962-2	SPACER, CYLINDRICAL, STRIP GUIDE	30
-	1	2844992-2	ASSEMBLY, STRIP GUIDE	29
-	1	455888-3	SPACER, CRIMPER	28
-	1	1320928-6	STRIP GUIDE	24
-	1	2168083-2	SCR, SKT HD CAP, RoHS, M4 X 8.0	21
-	2	1-18028-2	WASHER, FLAT, REG M4	20
-	1	2119533-1	STRIPPER, SIDE FEED	19
1 -	1	2119806-1	INSERT, SHEAR	13
-	1	3-22280-3	SPRING, COMPRESSION	12
-	1	1-356885-4	STOP, SHEAR	11
1 -	1	2119805-1	SHEAR HOLDER, FRONT	10
1 -	1	318707-1	FLOATING SHEAR, FRONT	9
1 1	1	4-1333204-2	ANVIL, COMBINATION	8
-	1	2119781-1	DEPRESSOR, SHEAR	5
-	1	238011-2	BLOCK, CRIMPER SPACER	4
1 1	1	1633996-6	CRIMPER, INSULATION SPECIAL	3
-	1	455888-9	SPACER, CRIMPER	2
1 1	1	1-456405-6	CRIMPER, WIRE PREMIUM	1
-77	-22	PART NO	DESCRIPTION	ITEM NO

PACIFIC VERSION
Shown on sheets 3 of 4 & 4 of 4
(Atlantic version shown on sheets 1 of 4 & 2 of 4)

THIS DRAWING IS A CONTROLLED DOCUMENT FOR TYCO ELECTRONICS CORPORATION. IT IS SUBJECT TO CHANGE WITHOUT NOTICE. THE TYCO ELECTRONICS ORGANIZATION SHOULD BE CONTACTED FOR THE LATEST REVISION.

DIMENSIONS: mm	TOLERANCES UNLESS OTHERWISE SPECIFIED: 0 PLC ± 1 PLC ± 2 PLC ± 3 PLC ± 4 PLC ± ANGLES ±	
MATERIAL - -	FINISH - -	

DWN	22SEP2011 L.ZHANG
CHK	22SEP2011 L.ZHANG
APVD	22SEP2011 S.XI
PRODUCT SPEC	-
APPLICATION SPEC	-
WEIGHT	-

TE Connectivity
Harrisburg, PA 17105-3608

NAME: Ocean Side Feed Applicator -

SIZE	CAGE CODE	DRAWING NO	RESTRICTED TO
A1	00779	C-2151234	-

Customer Accessible Production Drawing | SCALE 1:2 | SHEET 3 OF 4 | REV F

SHEETS 1 & 2 ARE NOT REQUIRED FOR PACIFIC VERSION

THIS DRAWING IS UNPUBLISHED. RELEASED FOR PUBLICATION 20
© COPYRIGHT 20 BY TYCO ELECTRONICS CORPORATION. ALL RIGHTS RESERVED.

LOC	DIST
A	66

REVISIONS

P	LTR	DESCRIPTION	DATE	DWN	APVD
	-	SEE SHEET 1	-	-	-

FEED TYPE

PNEUMATIC

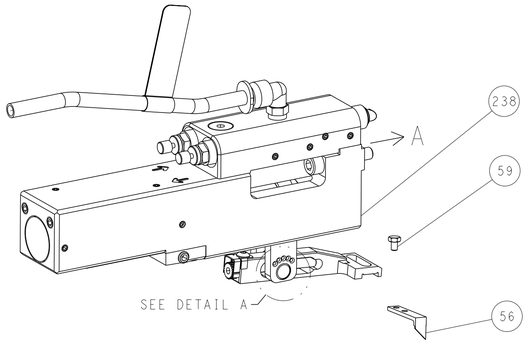

FEED SPRING SETTING POSITION
(SHOWN FROM REAR SIDE)

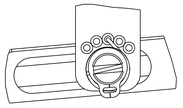

DETAIL A

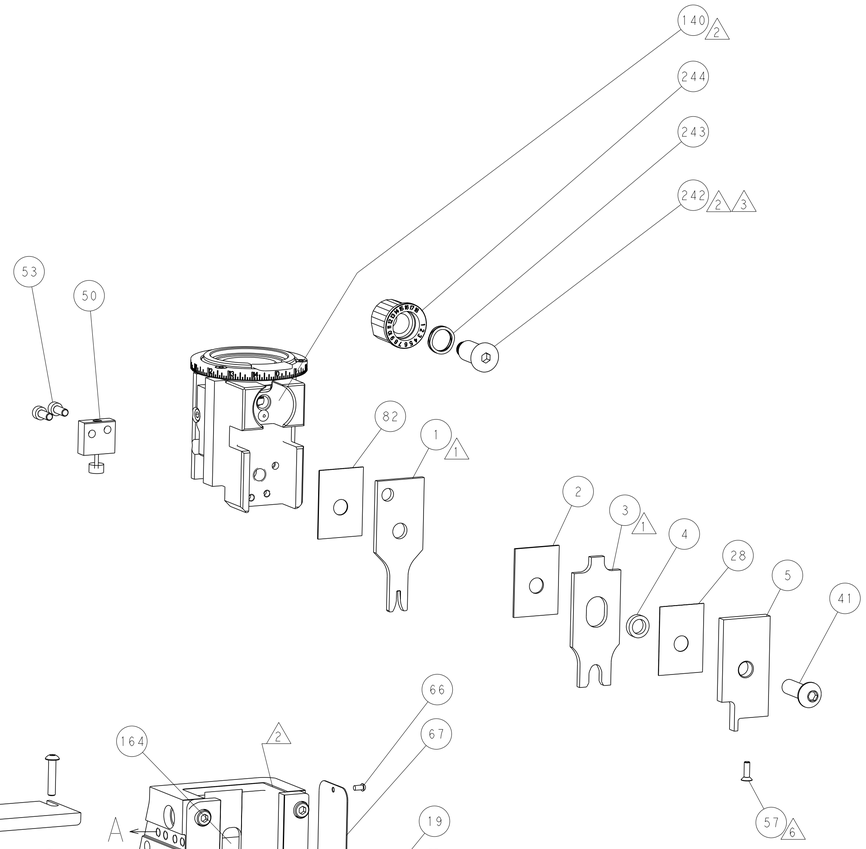

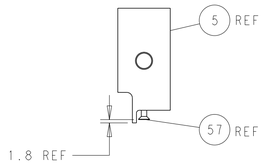

SHEAR DEPRESSOR DETAIL

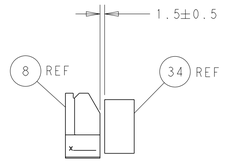

TERMINAL SUPPORT LOCATION

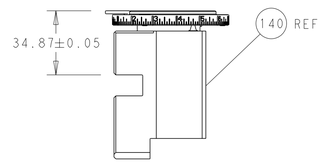

RAM SET-UP

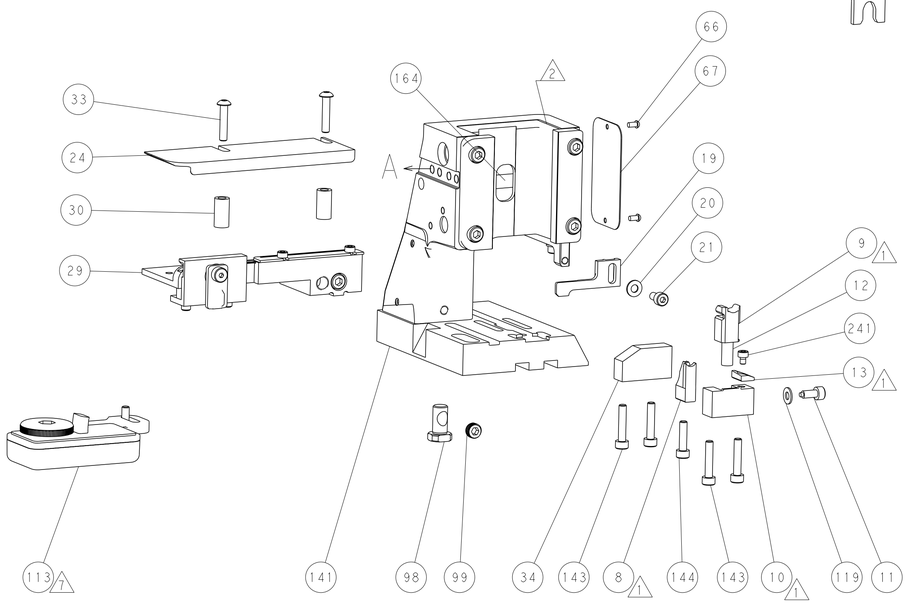

ITEM 30 LOCATED AT
FRONT HOLES

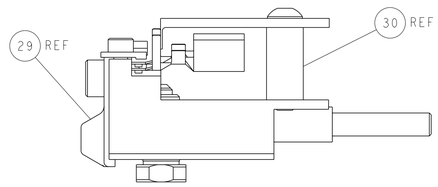

FEED TRACK POSITION
GUIDE BY INSULATION BARREL

CAM POSITION

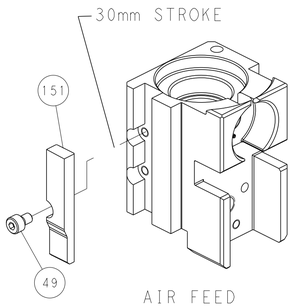

AIR FEED

PACIFIC VERSION

Shown on sheets 3 of 4 & 4 of 4
(Atlantic version shown on sheets 1 of 4 & 2 of 4)

THIS DRAWING IS A CONTROLLED DOCUMENT FOR TYCO ELECTRONICS CORPORATION. IT IS SUBJECT TO CHANGE AND THE CONTROLLING ENGINEERING ORGANIZATION SHOULD BE CONTACTED FOR THE LATEST REVISION.

DIMENSIONS: mm

TOLERANCES UNLESS OTHERWISE SPECIFIED:
0 PLC ±
1 PLC ±
2 PLC ±
3 PLC ±
4 PLC ±
ANGLES ±

MATERIAL - -
FINISH - -

DWN	L.ZHANG	22SEP2011
CHK	L.ZHANG	22SEP2011
APVD	S.XI	22SEP2011
PRODUCT SPEC	-	
APPLICATION SPEC	-	
WEIGHT	-	

TE Connectivity
Harrisburg, PA 17105-3608

NAME: Ocean Side Feed Applicator -

SIZE	CAGE CODE	DRAWING NO	RESTRICTED TO
A1	00779	C-2151234	-

Customer Accessible Production Drawing | SCALE 1:2 | SHEET 4 OF 4 | REV F

AMP 4805 REV 31MAR2000

SHEETS 1 & 2 ARE NOT REQUIRED FOR PACIFIC VERSION