SUNON®

*All products are **RoHS** compliant.

DC Brushless Fan & Blower

MagLev®

about Sunon

Sunon was founded in 1980 and has always upheld the philosophy of "Brand, Innovation, and Value" for their business operations. From the start, the Sunon name has become an international trademark that is well recognized and featured on products sold worldwide. Over the years, Sunon has continuously focused on developing and making innovations for their core motor technology, leading the industry in product trends for motors, cooling fans, and cooling modules. Sunon is one of the few operations in the world with a motor R&D team and is fully capable of developing innovative new motor designs. Examples for the R&D efforts are the world's first MagLev design and Sunon Mighty Mini series, featuring a compact sub-centimeter size that is the world's smallest and thinnest fan. Today, Sunon is the worldwide leader in precision motors and micro miniature fans, and is widely recognized by the industry as the designated partner for various multinational corporations. Sunon products are widely used in various applications and industries such as information technology, network communications, optoelectronics, and automobile electronics industries, as well as in industrial production equipment, medical equipment, home applications, OA machines, and others.

Sunon Research Center the Driving Engine for Inventions and Innovations

Sunon established the "Sunon Research Center" in Kaohsiung in 2002 to promote and execute the innovation blueprint for Sunon Group. Research labs and engineers from Europe, America, Japan, and China are centralized to form a worldwide technological service network for quick and efficient services.

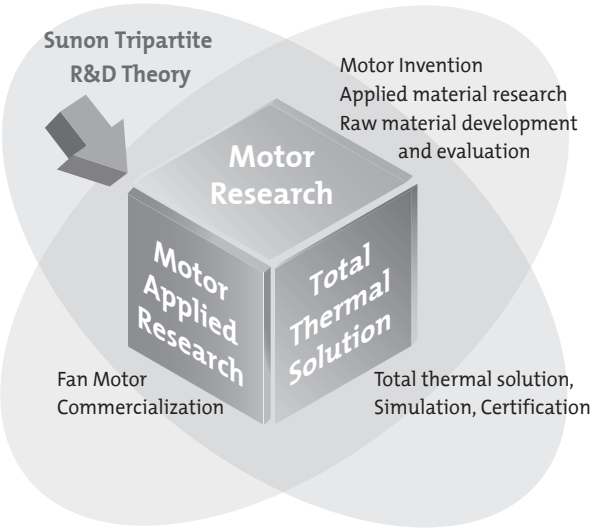

Key Modules for Innovating Core Motor Technology

Sunon has been researching their motor technology for over 30 years and adhering to the Sunon R&D Trinity as their innovation roadmap, focusing on the three major technology fields of "Motor Research," "Motor Applied Research," and "Total Thermal Solution." Sunon strives to expand the endless possibilities and optimization of motor applications and will continue to make breakthroughs and product innovations. The efforts will push Sunon to the front of the technology curve and clients will be able to realize their future dream products with the three key Sunon products of motors, cooling fans, and cooling modules.

Sunon has the capacity to design and implement the complete magnetic, mechanical, and driving circuit of a motor to conform to client design specifications. With the efforts of the mechanism and electrical circuit engineering teams, Sunon recognizes the needs of their clients regarding cooling modules and can provide flexible designs for high performance and high quality cooling fans. Sunon utilizes advanced simulation systems and analysis projects that result in an even more accurate heat analysis and heat dissipation design for the system. Subsequently the most efficient total thermal solution can be provided to the client.

about Sunon MagLev

The Sunon patented MagLev design is based on magnetic principles and forces that not only propel the fan but also ensure stable rotation over its entire 360 degrees of movement. Utilizing the attraction of the magnetic levitation force, MagLev eliminates the wobbling and shaking problems of traditional motor fans. With this new technology, the MagLev fan propeller is suspended in air during rotation so that the shaft and bearing do not come into direct contact with each other to create friction. These features result in a fan with **low acoustic noise level**, **high-temeperature endurance**, and **longer lifespan**.

Comparison between MagLev and General Motor Fans

(A) Sunon MagLev Fan

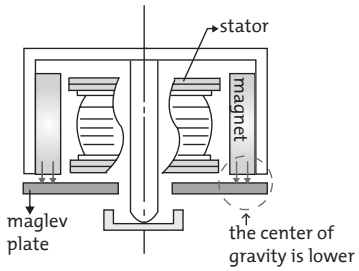

Possesses 3 important factors:
the maglev plate, the magnet and the stator

The resulting interaction between the maglev plate and the magnet pulls the rotor downward along the entire 360-degree surface. Due to the lower center of gravity, the rotor runs in a more stable consistent orbit.

(B) General Fan

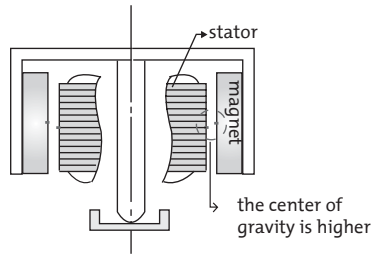

2 factors:
the magnet and the stator

The general fan utilizes a deviating magnetic center to attract the rotor downward. This technology causes the rotor to vibrate violently, due to the lack of a consistent orbit as well as a deviation of the magnetic center.

SUNON MagLev prevents the defects of conventional fans

	Deficiencies of Traditional Motors	Sunon MagLev Solution
Sleeve Bearing	● Weight of rotor is entirely loaded on to the shaft. Abrasive rotation between shaft and bearing will result in an irregular and rough surface on the inner surface of bearing bore. The fan motor rotation becomes uneven and in turn, causes operational noise and shortens fan life. ● The oil ring and mylar washer not only results in added friction area but also blocks the heated air, which, if not released before solidification, would become nitride particles that clog up in the gap between shaft and bearing bore, then causing a much slower rotation of rotor and noise.	● Entire weight of rotor is completely suspended by magnetic force in any mounted position, keeping the rotor rotating evenly around a fixed axis, while maintaining a fixed distance from inner surface of the bearing. No more friction or and noise. ● Oil ring, washer, and lubricant are no longer used in MagLev structure. Hence no more oil leakage or stuck rotor problems. ● The dust cap of Sunon MagLev motor fan not only prevents dust from penetrating into bearing and mixing with nitride particles to clog the motor, which may result in noise and slower motor operation, but it also retains the oil in the system and keeps the motor running smoothly for extended operation. ● MagLev design allows an operating temperature higher than 70^{0}C.
Ball Bearing	● When the fan motor is operating, the steel balls inside will generate a higher rotational noise than that of a sleeve bearing. ● The construction of Ball bearings is quite weak and unable to absorb external impact. The bearings can be easily damaged, causing louder rotational noise.	

Sunon Sound Quality Analysis and Research

Sunon introduced acoustics engineering in the year 2000 to transform the traditional school of Sound Pressure and Sound Power into the more advanced theory of Sound Quality. Sunon's Sound Quality analysis and research is performed by Head Measurement System (HMS) . The HMS system records and simulates the auditory senses of the human ears, where the sounds, vibration, rotation speed, and electrical signals are measured. The software subsequently performs time domain and sound quality parameter analysis to assist the acoustics engineers in allowing Sunon products to feature a more favorable sound quality. The expertise and experience of the acoustics engineer combined with the software analysis will result in an even more user-friendly environment that is rivaled by none.

Sound Quality Testing

Sound quality is measured in an semi anechoic chamber by means of Head Measurement System (HMS) .

The Sound quality of fans can be described according to the objective parameter of sound (Loudness, Tonality, Roughness/Fluctuation, Sharpness).

After the recording of acoustic signals,the data is performed the FFT, order Psycho acoustic And modulation analyses and playback diagnosis in order to improve the sound quality of fans.

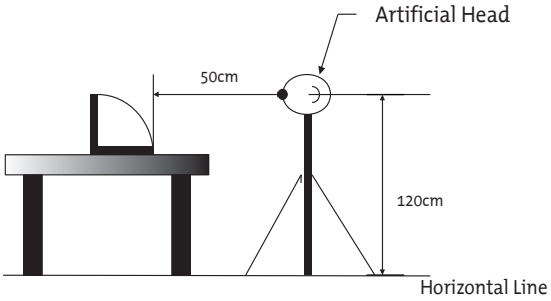

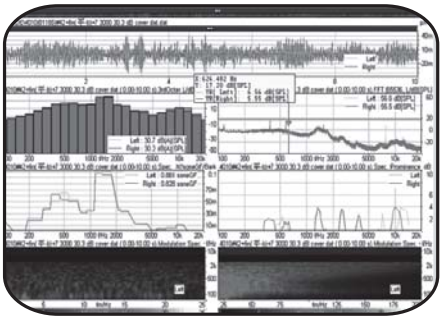

The mobile Sound Quality Laboratory SQlab II

SQlab II is a compact, mobile multi-channel measurement system for acoustic analysis, vibration investigation and sound design. It is used wherever investigation of sound quality should be combined with vibrational measurements.

The comparison of vibrational measurements with acoustic signals enables the user to draw direct conclusions from sound sources and their sound quality. For this purpose, SQlab II is able to measure aurally-accurate recordings of sound events using an Artificial Head and vibration data with accelerometers, etc. at the same time. Thus, correlations between the subjective aural impressions of sound events (airborne sound) and the related sources (vibration, solid-borne sound) as well as transfer mechanisms become apparent. This is the basis for sound optimization. Moreover, SQlab II can be used as a "stethoscope" for error analysis.

The Analysis Software

It can analyze, filter, display and document acoustic and vibration measurement data in a wide range of modes. Yet an outstanding feature of this software is the possibility of including the aural sense of the human user in signal analysis.

HEADphone Playback System

The digital 24 bit HEADphone Playback System HPS IV is complementary to the Head Measuring System HMS III. Conditioning of audio data for aurally-accurate playback is via equalization of the acoustic signal in the programmable Equalizer PEQ IV, with subsequent amplification via the Power Amplifier PVA IV.2. Two electrostatic headphones can be connected to the playback system, which are individually calibrated and correspondingly driven.

Sunon Total Thermal Solution

Sunon introduced its first chip cooling module in 1993, it has continued to rely on its impressive R&D team to also succeed in the laptop computer cooling module market. Sunon's innovative technology and superior design talent have consistently won customers' trust. In addition to Sunon's cutting-edge cooling fan products, it also offers laptop, VGA card, Desk Top, and server product designs. Sunon's cooling module product line ranges from low-end to high-end, enabling it the ability to provide customers with "Total Thermal Solutions."

Sophisticated Tools Strengthen Design and Quality

Apart from optimized design and superior R&D, we use infrared (IR) thermal imagers in module design work to make precise measurements of module temperatures, thereby avoiding the use of conventional thermocouples to measure temperatures. Our R&D personnel can instead rely on IR images to get a clear understanding of system temperature distribution. The data from our thermal imaging reports allow us to provide a clear system-wide thermal and cooling design analysis. In order to give customers the best quality guarantee, we go well beyond industry standards in production, assembly, inspection equipment design and deployment. We have also committed large amounts of manpower and material resources, and adopted the newest hardware and software equipment in our quest for quality. For instance, our thermal inspection systems can fully simulate thermal resistance measurements and pressure settings within systems and measure thermal resistance simultaneously at six different points. Precise measurements of pressure settings enable simulation of pressure within the system, making measurements even more accurate and protecting product quality by ensuring that excessive pressure doesn't cause product deformation. Furthermore, independent bar codes on each product ensure effective product tracking and improve the quality of after-sales service. We can satisfy our customers' needs for various types of customized cooling modules while meeting the highest quality requirements.

Structural Simulation analysis

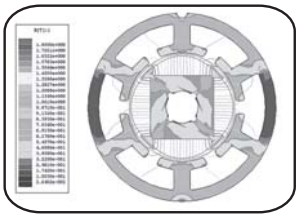
Magnetization Simulation analysis

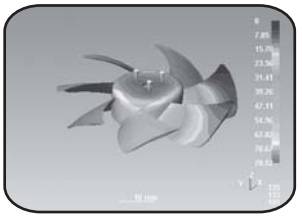
Fluid dynamic analysis

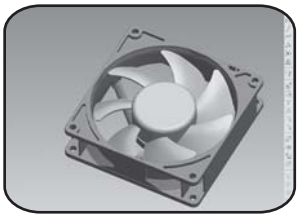
3D model

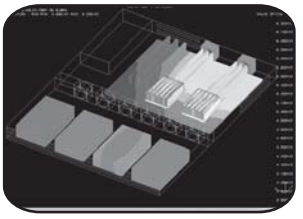
Thermal analysis

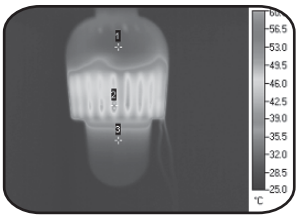

IR thermograph inspect

Advantage for Sunon Thermal Solutions Design

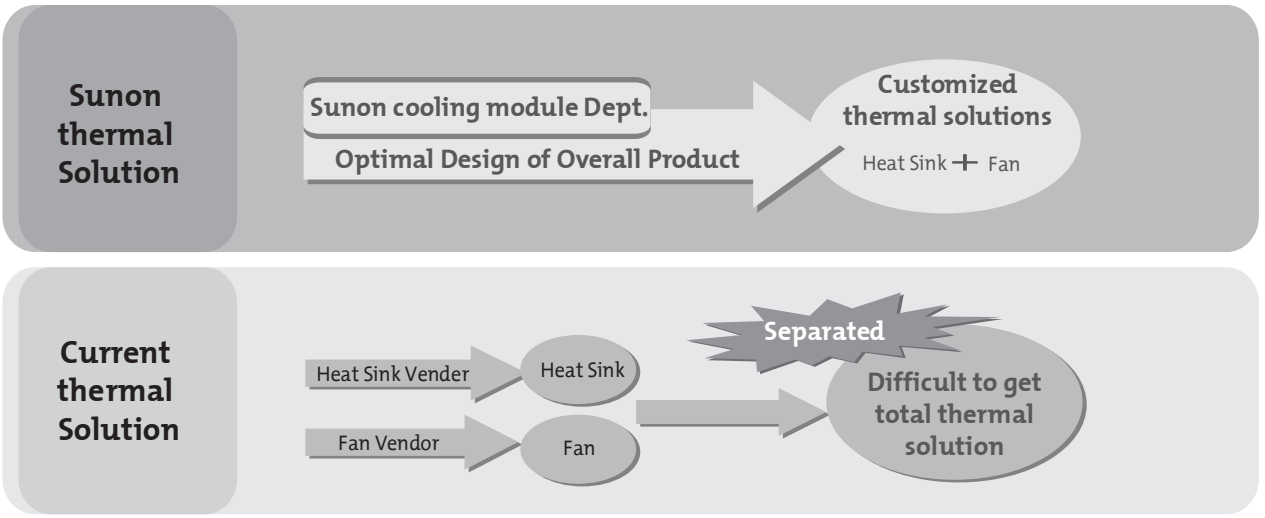

Fan 3rd Wire Signal

Fan with switching driving circuit designed for rpm measurement:
These fan motors have three lead wires:
+:Red,
-:Black,
output signal for 3rd wire:
F Type : Yellow
R Type : White

- **R Type** (Rotation Detector)

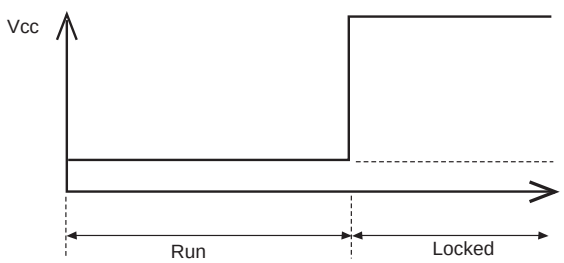

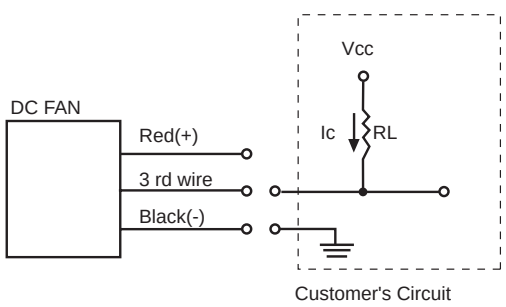

- **F Type** (Frequency Generator)

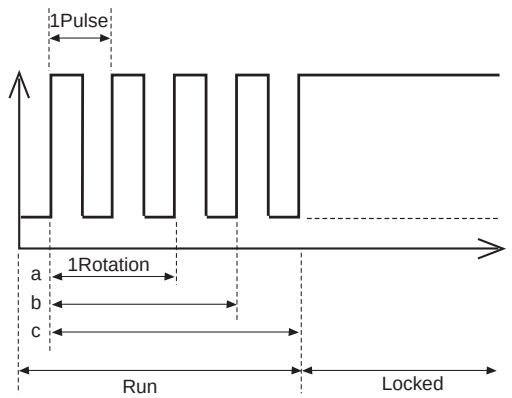

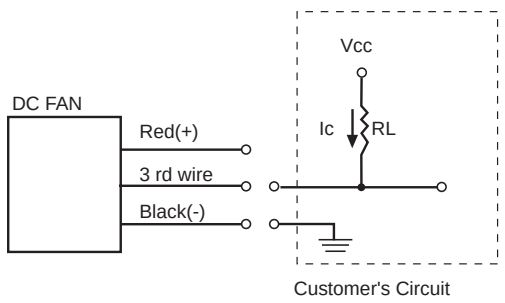

The relationship between rotation & output pulses signal from 3rd wire are as follows:
(a) 1 Rotation=2 Pulses(4 poles' motor)
(b) 1 Rotation=3 Pulses(6 poles' motor)
(c) 1 Rotation=4 Pulses(8 poles' motor)

Notice:
For 8 poles' motor: normally, 1Rotation=4 pulses, if frequency divided circuit is implemented in this motor then 1Rotation=2 pulses.

Sunon Reliability Verification System

Sunon has 5 reliability testing labs worldwide equipped with the topmost precision verification instruments for testing from the design phase, through pre-production, and into mass production. The complete verification system is computerized and fully automated for precise analysis of product reliability and quality satisfaction to meet the market requirements.

Sunon Production Network

Sunon Group has a total of five manufacturing plants located in both China and Taiwan for production of 8mm~250mm series of fan products, 0.1Watt~60Watt of motor products, and various cooling module products. The overall monthly production output capacity is 16 million units.

In addition to the MES system that provides clients with the best manufacturing quality, Sunon goes well beyond industry standards in production, assembly, inspection equipment design and deployment. Sunon has also committed large amounts of manpower and material resources, and adopted the newest hardware and software equipment, in our quest for quality. For example, an automated production line for cooling products, the self-developed automated inspection machine for the production line, a heat inspection system capable of six simultaneous measurements, and an independent barcode with each cooling product indicate Sunon's commitment.

Sunon manufacturing bases have obtained certifications for QS9000, ISO9001, ISO14001, ISO/TS16949, and OHSAS18001. Each product has passed UL, TUV, VDE, CCC, CSA certifications and so on.

All Sunon products are RoHS compliant from design phase to mass production.
Sunon is the long-term green partner for SONY, CANON, SAMSUNG and various other multinational companies

Sunon deeply recognizes its corporate duty to protect our earth and the ecosystem and to reduce the use of materials that impact the environment. In light of this, Sunon has been actively promoting green product design, green purchasing, and green manufacturing reforms. All current product series conform to EU RoHS and China RoHS, and Sunon has been selected as the green environment partner for multinational corporations such as SONY, CANON, and SAMSUNG. All of the aforementioned efforts will result in greener products that have the least impact on the worldwide environment.

For improving the quality management system and regulations of hazardous materials contained in the products, Sunon further introduces the IECQ QC080000 to their product production. This will complete the approval and certification process for usage of hazardous materials and the reduction management system, thereby setting up a green quality management system that conforms to international standards for the benefit of Sunon and their partners.

Kun Shan plant

Foshan plant

Kuns Yuan plant

Headquarters

Kaohsiung plant I
Kaohsiung Plant II

SUNON Contents

	Page
Sunon research center	p01
Sunon MagLev	p02
Sunon Sound quality	p03
Sunon total thermal solution	p04
Sunon fan 3rd wire signal	p05
Sunon Production Network	p06
Content	p07
DC Fan & Blower Model Numbering System	p08
New DC Fan & Blower Model Numbering Systemn / Certification & Safety	p09

DC Fan

Size (mm)	Air Flow (CFM)	Page	Size (mm)	Air Flow (CFM)	Page
17x17x8	0.7~0.9	p10	60x60x20	19~25.5	p37
20x20x8	1.3~1.6	p11	60x60x25	29~40	p38
20x20x10	1.5~1.9	p12	60x60x25	19.3~27	p39
25x25x6	2.2~3.0	p13	60x60x38	41.5~56.5	p40
25x25x10	3.0~3.5	p14	NEW 60x60x60	67	p41
25x25x15	2.2~3.1	p15	70x70x15	19~27	p42
30x30x6	3.7~4.9	p16	70x70x20	37~43	p43
30x30x10	4.6~5.5	p17	70x70x20	23.5~29	p44
30x30x15	4.8~6.0	p18	70x70x25	40~49	p45
35x35x6	4.3~5.5	p19	70x70x25	24~32.5	p46
35x35x10	6.5~7.0	p20	80x80x15	32~40	p47
38x38x20	10.6~13.5	p21	80x80x20	45~53	p48
38x38x28	12.6~19.0	p22	80x80x20	29~39	p49
40x40x6	5.5~5.9	p23	80x80x25	49~60	p50
40x40x10	7.0~8.0	p24	NEW 80x80x25	53~60	p51
NEW 40x40x15	14	p25	NEW 80x80x25	33~45	p52
40x40x20	6.3~10.8	p26	NEW 80x80x32	61.9	p53
40x40x20	6.3~10.8	p27	80x80x38	59.5~84.1	p54
NEW 40x40x24	21.6	p28	92x92x25	65~77	p55
NEW 40x40x28	23.4	p29	NEW 92x92x25	65~75	p56
NEW 40x40x56	26.7	p30	NEW 92x92x25	39.5~55	p57
45x45x10	9.2~11.0	p31	NEW 92x92x32	79	p58
50x50x10	11~13	p32	92x92x38	91.7~120.2	p59
NEW 50x50x15	10.2~17	p33	120x120x25	120~150	p60
NEW 55x55x15	21.1	p34	NEW 120x120x25	75~108.2	p61
60x60x15	15~21	p35	120x120x38	153~190	p62
60x60x20	27.5~30.5	p36	NEW 120x120x38	93~138	p63

DC Blower

Size (mm)	Air Flow (CFM)	Page	Size (mm)	Air Flow (CFM)	Page
NEW 35x35x7	0.9	p64	NEW 60x60x25	7.3	p69
NEW 45x45x20	4.6	p65	75x75x30	7.5~13.6	p70
50x50x15	2.3~4.7	p66	97x94x33	22.4~30.5	p71
50x50x20	4.8~5.7	p67	120x120x32	31.4~35.9	p72
60x60x15	3.5~5.2	p68			

GM 05 02 P F V 1 - 8

Motor Poles
8: 8 Poles
6: 6 Poles
Blank: 4 Poles

Speed
X: Super
1: High
2: Middle
3: Low
4: Extra Low

Bearing System
V: Vapo
B: Ball

Frame Thickness
E: 6mm
D: 8mm
F: 10mm
G: 12mm
H: 15mm
K: 20mm
B: 24mm
T: 25mm
Q: 28mm
N: 30mm
L: 32mm
Y: 33mm
I: 35mm
M: 38mm
O: 40mm
P: 56mm

Frame Material
P: PBT Plastic
A: Aluminum

Frame Size
17:17mm
01:20mm
02:25mm
03:30mm
35:35mm
38:38mm
04:40mm
45:45mm
05:50mm
55:55mm
06:60mm
07:70mm
75:75mm
08:80mm
09:92mm
97:97mm
12:120mm

Voltage
05:5VDC
24:24VDC
12:12VDC
48:48VDC

Fan Series
GM Series
GB Series
KD Series
KDE Series
PMD Series
PSD Series
PMB Series

P/N

Example: KDE1208PTV1 P/N:13.MS.A.GN

- 11/13 Motor model
- MS MagLev Design
- (2) Two ball bearing
- G Big hub
- (9) 9 Blades
- N Smaller hub
- A Auto restart
- F 3rd wire with frequency generation waveform
- R 3rd wire with rotation detector waveform
- U Upgrade
- GN RoHS compliance
- X UV Glue
- Z Specifice RPM

ME 80 25 1 V 1 - 0000 - 999

Function Code
999: standard model
A99: AutoRestart
B99: R type,
3rd wire with rotation detector waveform
C99: F type,
3rd wire with frequency generation waveform
D99: with PWM

Customer Code
0000 **stand for standard model**

Speed
X:Super High 3: Low
1: High 4: Super Low
2: Medium

Bearing
V: Vapo O: 1Ball
B: 2 Ball S: Sleeve

Voltage
0: 5VDC 3: 36VDC
1: 12VDC 4: 48VDC
2: 24VDC

Fan Thickness
0~9; A~Z (except O)

Frame Size
0~9; A~Z (except O)

Series Code
EE : E Series PF : P Series
ME: M Series

Code	Size(mm)	Code	Size(mm)	Code	Size(mm)	Code	Size(mm)
01~09	01~09	A0~A9	100~109	K0~K9	200~209	V0~V9	300~309
10~19	10~19	B0~B9	110~119	L0~L9	210~219	W0~W9	310~319
20~29	20~29	C0~C9	120~129	M0~M9	220~229	X0~X9	320~329
30~39	30~39	D0~D9	130~139	N0~N9	230~239	Y0~Y9	330~339
40~49	40~49	E0~E9	140~149	P0~P9	240~249	Z0~Z9	340~349
50~59	50~59	F0~F9	150~159	Q0~Q9	250~259		
60~69	60~69	G0~G9	160~169	R0~R9	260~269		
70~79	70~79	H0~H9	170~179	S0~S9	270~279		
80~89	80~89	I0~I9	180~189	T0~T9	280~289		
90~99	90~99	J0~J0	190~199	U0~U9	290~299		

Certification

Safety

* Note: For critical or extreme environments, including non stop operation, please contact Sunon and we will gladly provide assistance with your product selection to ensure an appropriate cooling product for your application.

17x17x8 mm

0.7~0.9 CFM

MAGLev by SUNON	P/N	Bearing ● VAPO	Rating Voltage (VDC)	Power Current (AMP)	Power Consumption (WATTS)	Speed (RPM)	Air Flow (CFM)	Static Pressure (Inch-H_2O)	Noise (dBA)	Weight (g)	Curve
GM0517PDV1-8	GN	●	5	0.16	0.8	20000	0.9	0.28	25	4.36	1
GM0517PDV2-8	GN	●	5	0.11	0.6	15000	0.7	0.17	16	4.36	2

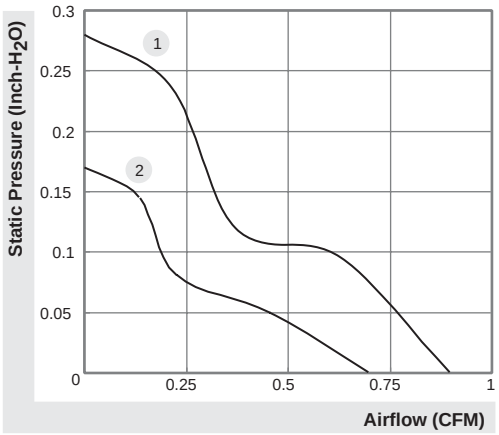

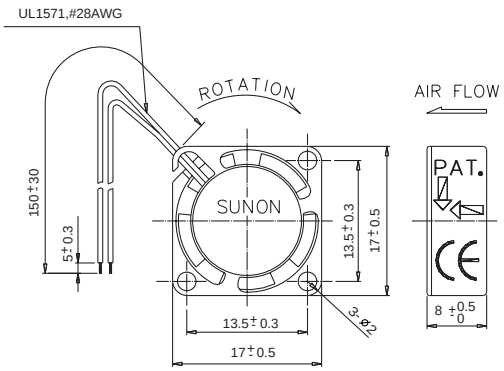

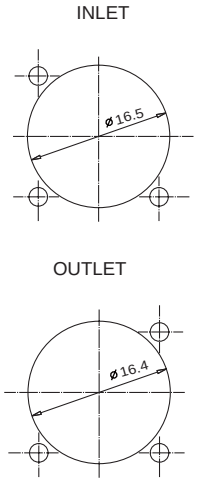

*All model could be customized. Please contact with Sunon Sales.
*Specifications subject to change without notice. Please Visit SUNON web site at http://www.sunon.com for update information.

20x20x8 mm

1.3~1.6 CFM

MAGLev by SUNON	P/N	Bearing ● VAPO	Rating Voltage (VDC)	Power Current (AMP)	Power Consumption (WATTS)	Speed (RPM)	Air Flow (CFM)	Static Pressure (Inch-H_2O)	Noise (dBA)	Weight (g)	Curve
GM0501PDV1-8	GN	●	5	0.17	0.9	15000	1.6	0.22	23	4.64	1
GM0501PDV2-8	GN	●	5	0.11	0.6	12000	1.3	0.15	21	4.64	2

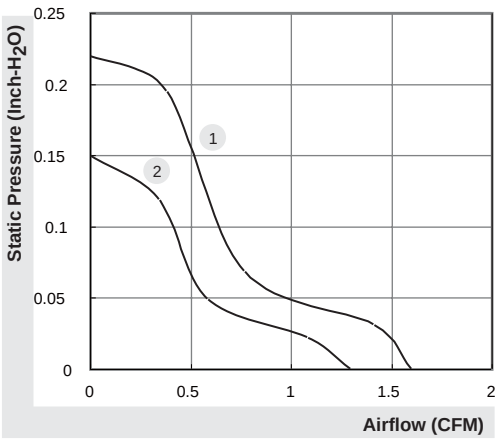

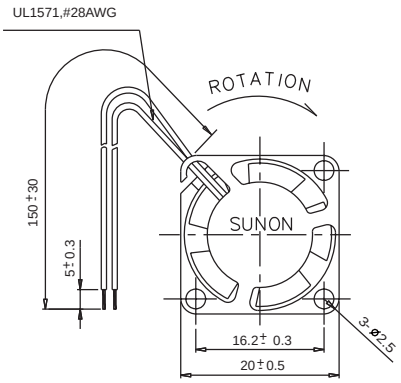

(Units : mm)

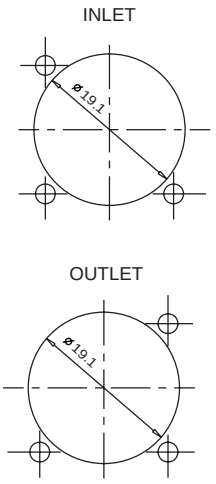

*All model could be customized. Please contact with Sunon Sales.
*Specifications subject to change without notice. Please Visit SUNON web site at http://www.sunon.com for update information.

20x20x10 mm

1.5~1.9 CFM

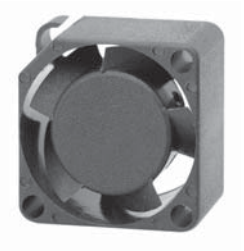

MAGLev by SUNON	P/N	Bearing ● VAPO	Rating Voltage (VDC)	Power Current (AMP)	Power Consumption (WATTS)	Speed (RPM)	Air Flow (CFM)	Static Pressure (Inch-H_2O)	Noise (dBA)	Weight (g)	Curve
GM0501PFV1-8	N.GN	●	5	0.21	1.1	17000	1.9	0.29	25	5.5	1
GM0501PFV2-8	N.GN	●	5	0.18	0.9	14000	1.5	0.20	20	5.5	2

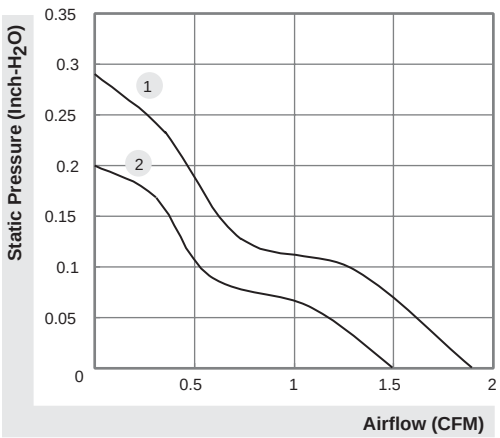

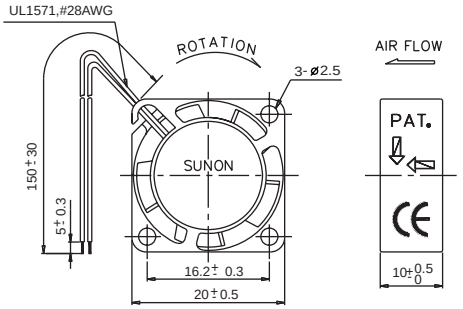

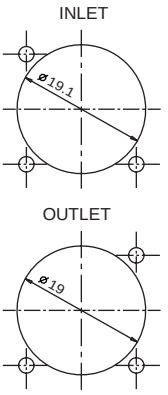

*All model could be customized. Please contact with Sunon Sales.
*Specifications subject to change without notice. Please Visit SUNON web site at http://www.sunon.com for update information.

25x25x6 mm

2.2~3.0 CFM

MAGLev by SUNON	P/N	Bearing ● VAPO	Rating Voltage (VDC)	Power Current (AMP)	Power Consumption (WATTS)	Speed (RPM)	Air Flow (CFM)	Static Pressure (Inch-H_2O)	Noise (dBA)	Weight (g)	Curve
GM0502PEV1-8	N.GN	●	5	0.11	0.6	13000	3.0	0.22	31	5	1
GM0502PEV2-8	N.GN	●	5	0.08	0.4	10000	2.2	0.16	23	5	2

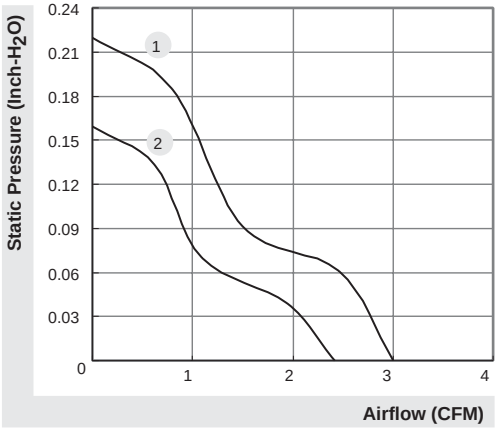

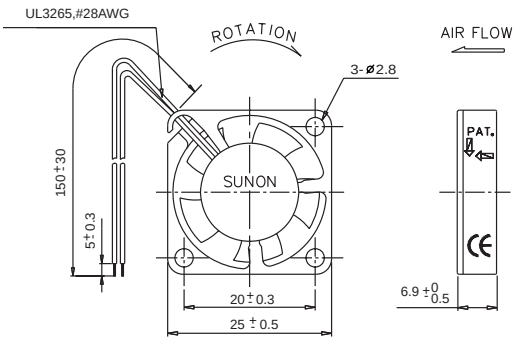

(Units : mm)

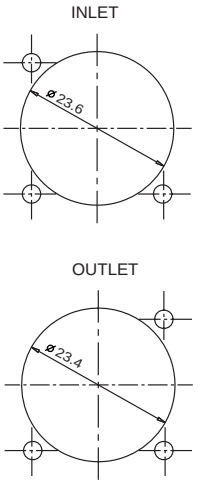

*All model could be customized. Please contact with Sunon Sales.
*Specifications subject to change without notice. Please Visit SUNON web site at http://www.sunon.com for update information.

25x25x10 mm

3.0~3.5 CFM

MAGLev by SUNON	P/N	Bearing ● VAPO	Rating Voltage (VDC)	Power Current (AMP)	Power Consumption (WATTS)	Speed (RPM)	Air Flow (CFM)	Static Pressure (Inch-H_2O)	Noise (dBA)	Weight (g)	Curve
GM0502PFV1-8	GN	●	5	0.12	0.6	13000	3.5	0.25	23	7.5	1
GM0502PFV2-8	GN	●	5	0.08	0.4	10000	3.0	0.18	16	7.5	2
GM1202PFV1-8	GN	●	12	0.067	0.8	13000	3.5	0.25	23	7.5	1
GM1202PFV2-8	GN	●	12	0.038	0.5	10000	3.0	0.18	16	7.5	2

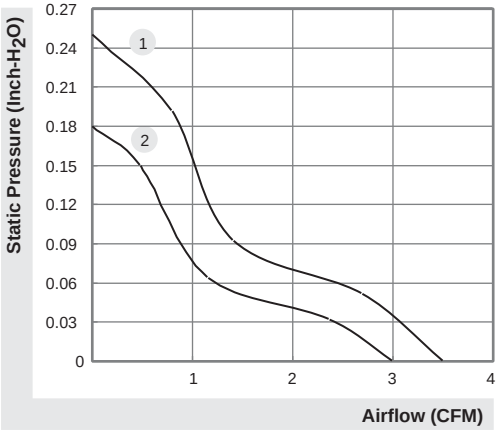

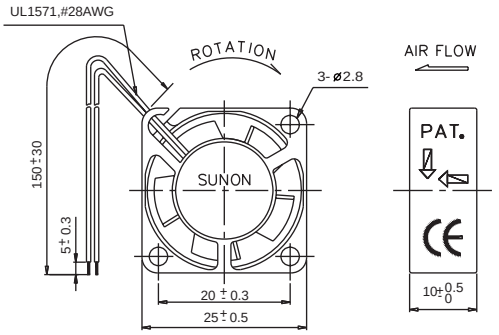

(Units : mm)

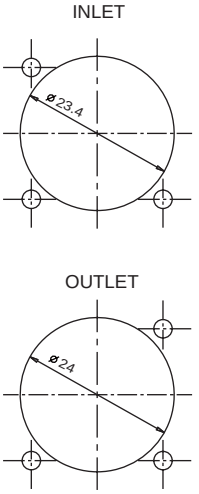

*All model could be customized. Please contact with Sunon Sales.
*Specifications subject to change without notice. Please Visit SUNON web site at http://www.sunon.com for update information.

25x25x15 mm

2.2~3.1 CFM

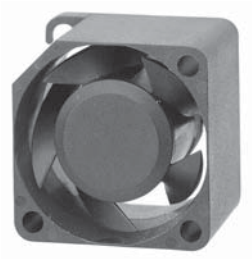

MAGLev by SUNON	P/N	Bearing ● VAPO	Rating Voltage (VDC)	Power Current (AMP)	Power Consumption (WATTS)	Speed (RPM)	Air Flow (CFM)	Static Pressure (Inch-H_2O)	Noise (dBA)	Weight (g)	Curve
GM0502PHV1-8	GN	●	5	0.11	0.6	10000	3.1	0.16	20	11	1
GM0502PHV2-8	GN	●	5	0.08	0.4	7000	2.2	0.11	14	11	2
GM1202PHV1-8	GN	●	12	0.048	0.6	10000	3.1	0.16	20	11	1
GM1202PHV2-8	GN	●	12	0.029	0.4	7000	2.2	0.11	14	11	2

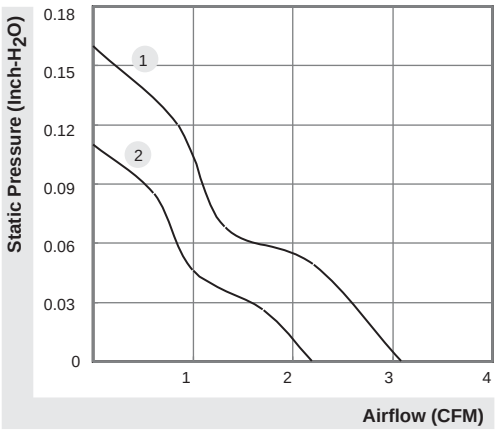

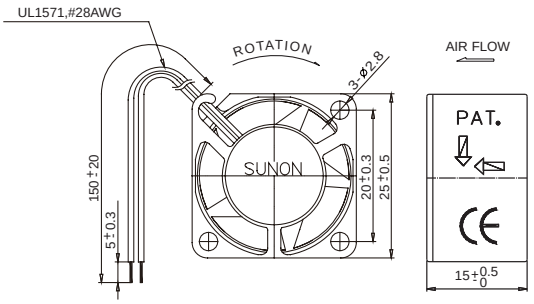

(Units : mm)

INLET

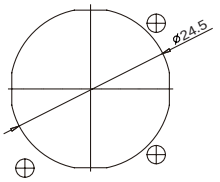

OUTLET

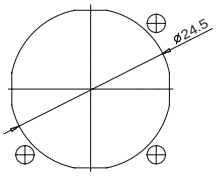

*All model could be customized. Please contact with Sunon Sales.
*Specifications subject to change without notice. Please Visit SUNON web site at http://www.sunon.com for update information.

30x30x6 mm

3.7~4.9 CFM

MAGLev by SUNON	P/N	Bearing ● VAPO	Rating Voltage (VDC)	Power Current (AMP)	Power Consumption (WATTS)	Speed (RPM)	Air Flow (CFM)	Static Pressure (Inch-H_2O)	Noise (dBA)	Weight (g)	Curve
GM0503PEV1-8	N.GN	●	5	0.13	0.7	9500	4.9	0.14	28	6	1
GM0503PEV2-8	N.GN	●	5	0.08	0.4	7500	3.7	0.09	24	6	2

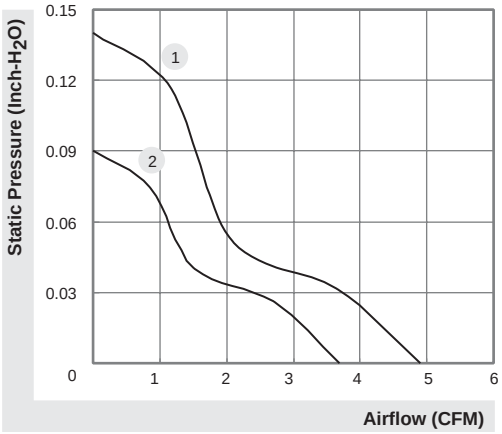

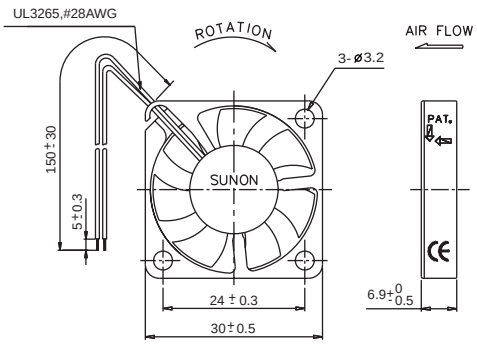

(Units : mm)

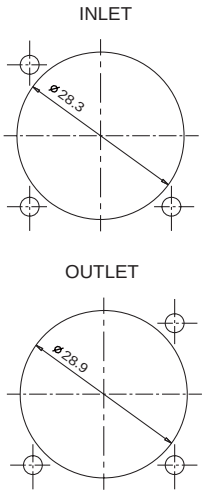

*All model could be customized. Please contact with Sunon Sales.
*Specifications subject to change without notice. Please Visit SUNON web site at http://www.sunon.com for update information.

30x30x10 mm

4.6~5.5 CFM

MAGLev by SUNON	P/N	Bearing ● VAPO	Rating Voltage (VDC)	Power Current (AMP)	Power Consumption (WATTS)	Speed (RPM)	Air Flow (CFM)	Static Pressure (Inch-H_2O)	Noise (dBA)	Weight (g)	Curve
GM0503PFV1-8	GN	●	5	0.14	0.7	9500	5.5	0.15	23	8.6	1
GM0503PFV2-8	GN	●	5	0.10	0.5	8000	4.6	0.12	20	8.6	2
GM1203PFV1-8	GN	●	12	0.078	1.0	9500	5.5	0.15	23	8.5	1
GM1203PFV2-8	GN	●	12	0.042	0.5	8000	4.6	0.12	20	8.5	2

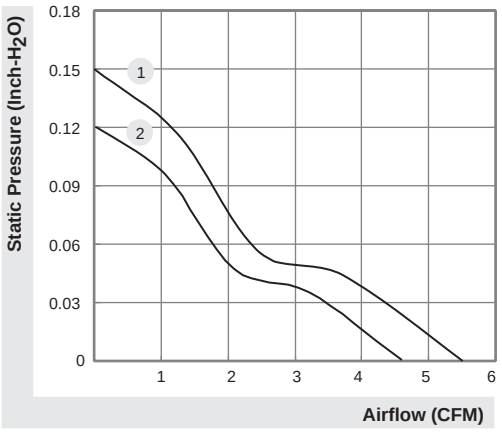

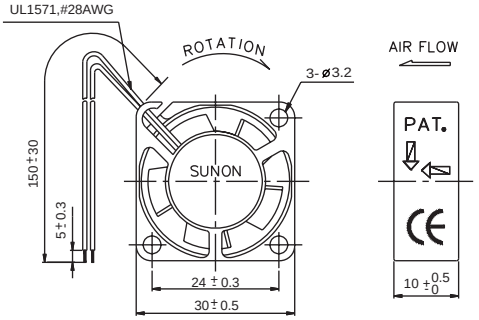

(Units : mm)

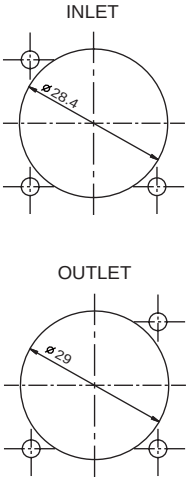

*All model could be customized. Please contact with Sunon Sales.
*Specifications subject to change without notice. Please Visit SUNON web site at http://www.sunon.com for update information.

30x30x15 mm

4.8~6.0 CFM

MAGLev by SUNON	P/N	Bearing ● VAPO	Rating Voltage (VDC)	Power Current (AMP)	Power Consumption (WATTS)	Speed (RPM)	Air Flow (CFM)	Static Pressure (Inch-H_2O)	Noise (dBA)	Weight (g)	Curve
GM0503PHV1-8	GN	●	5	0.11	0.6	8500	6.0	0.17	27	13.5	1
GM0503PHV2-8	GN	●	5	0.07	0.4	7000	4.8	0.12	20	13.5	2
GM1203PHV1-8	GN	●	12	0.054	0.6	8500	6.0	0.17	27	13.2	1
GM1203PHV2-8	GN	●	12	0.029	0.4	7000	4.8	0.12	20	13.2	2

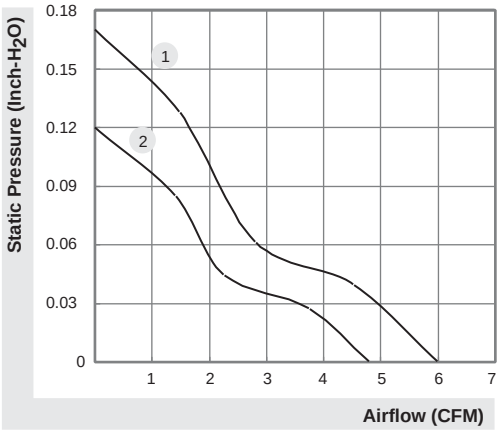

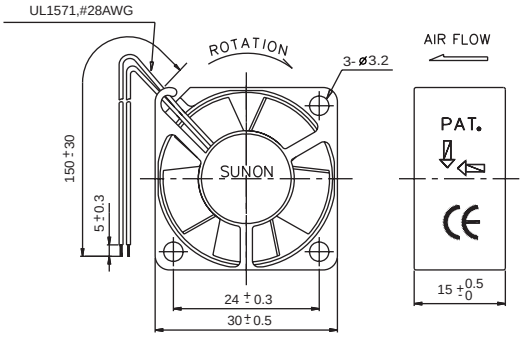

(Units : mm)

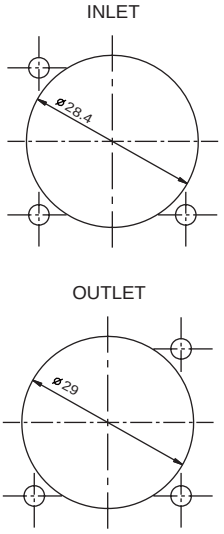

*All model could be customized. Please contact with Sunon Sales.
*Specifications subject to change without notice. Please Visit SUNON web site at http://www.sunon.com for update information.

35x35x6 mm

4.3~5.5 CFM

MAGLev by SUNON	P/N	Bearing ● VAPO	Rating Voltage (VDC)	Power Current (AMP)	Power Consumption (WATTS)	Speed (RPM)	Air Flow (CFM)	Static Pressure (Inch-H_2O)	Noise (dBA)	Weight (g)	Curve
GM0535PEV1-8	N.GN	●	5	0.14	0.7	7600	5.5	0.08	26	7	1
GM0535PEV2-8	N.GN	●	5	0.09	0.5	5800	4.3	0.06	19	7	2

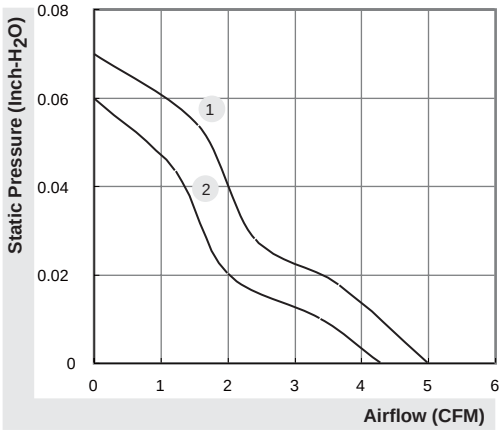

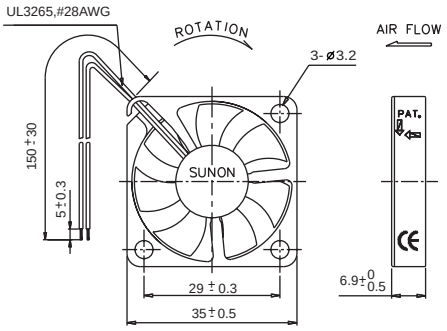

(Units : mm)

INLET

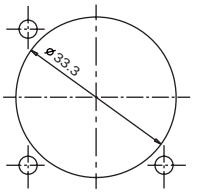

OUTLET

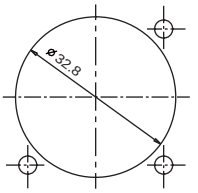

*All model could be customized. Please contact with Sunon Sales.
*Specifications subject to change without notice. Please Visit SUNON web site at http://www.sunon.com for update information.

35x35x10 mm

6.5~7.0 CFM

MAGLev by SUNON	P/N	Bearing ● VAPO	Rating Voltage (VDC)	Power Current (AMP)	Power Consumption (WATTS)	Speed (RPM)	Air Flow (CFM)	Static Pressure (Inch-H_2O)	Noise (dBA)	Weight (g)	Curve
GM0535PFV1-8	GN	●	5	0.15	0.8	9500	7.0	0.18	28	10.5	1
GM0535PFV2-8	GN	●	5	0.10	0.5	7500	6.5	0.12	22	10.5	2
GM1235PFV1-8	GN	●	12	0.08	1.0	9500	7.0	0.18	28	10.5	1
GM1235PFV2-8	GN	●	12	0.043	0.5	7500	6.5	0.12	22	10.5	2

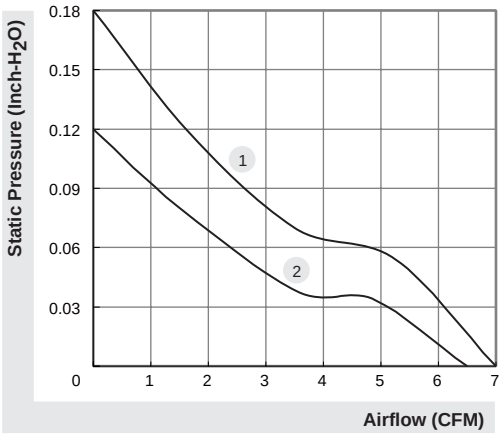

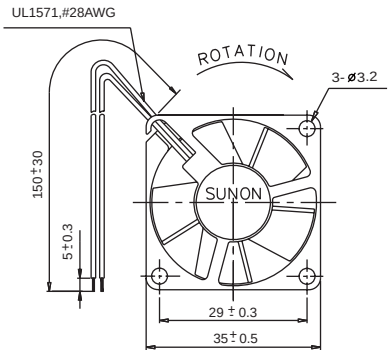

(Units : mm)

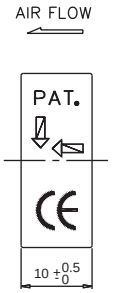

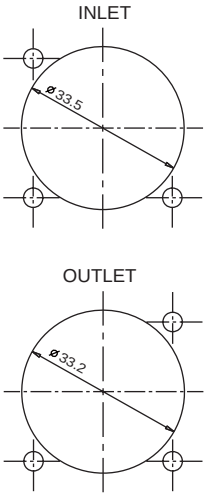

*All model could be customized. Please contact with Sunon Sales.
*Specifications subject to change without notice. Please Visit SUNON web site at http://www.sunon.com for update information.

38x38x20 mm

10.6~13.5 CFM

MAGLev by SUNON	P/N	Bearing ● VAPO	Rating Voltage (VDC)	Power Current (AMP)	Power Consumption (WATTS)	Speed (RPM)	Air Flow (CFM)	Static Pressure (Inch-H_2O)	Noise (dBA)	Weight (g)	Curve
PMD1238PKBX-A	(2).GN	◐	12	0.36	4.3	15000	13.5	0.82	48.0	27	1
PMD1238PKB1-A	(2).GN	◐	12	0.26	3.1	13000	12.0	0.61	44.0	27	2
PMD1238PKB2-A	(2).GN	◐	12	0.21	2.5	11000	10.6	0.45	39.0	27	3

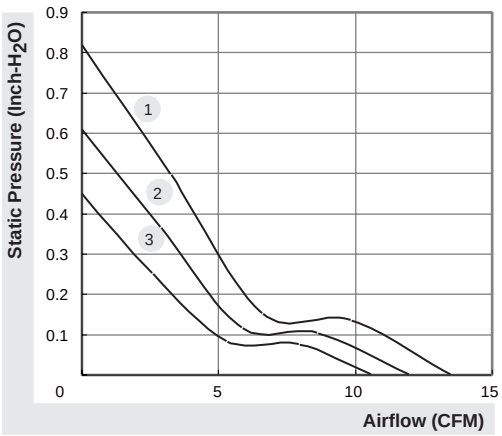

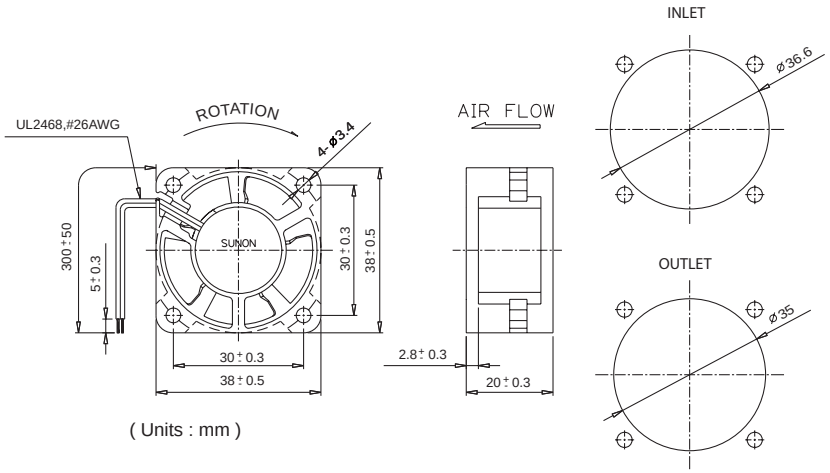

*All model could be customized. Please contact with Sunon Sales.
*Specifications subject to change without notice. Please Visit SUNON web site at http://www.sunon.com for update information.

38x38x28 mm

12.6~19.0 CFM

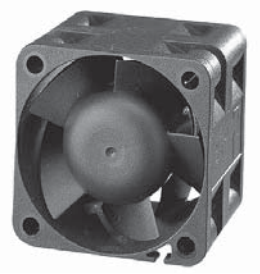

MAGLev by SUNON	P/N	Bearing ● VAPO	Rating Voltage (VDC)	Power Current (AMP)	Power Consumption (WATTS)	Speed (RPM)	Air Flow (CFM)	Static Pressure (Inch-H_2O)	Noise (dBA)	Weight (g)	Curve
PMD1238PQBX-A	(2).GN	●	12	0.48	5.8	15000	19.0	1.20	52.0	35.2	1
PMD1238PQB1-A	(2).GN	●	12	0.30	3.6	13000	16.5	0.91	47.0	35.2	2
PMD1238PQB2-A	(2).GN	●	12	0.19	2.3	10000	12.6	0.55	42.0	35.2	3

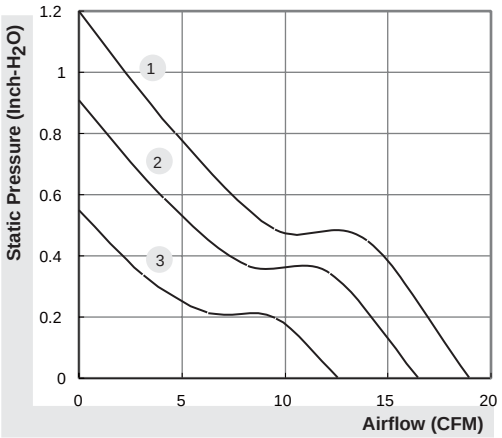

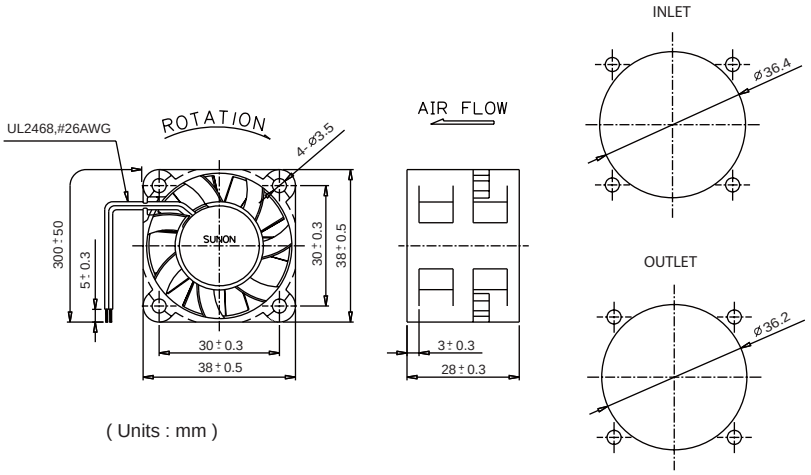

(Units : mm)

*All model could be customized. Please contact with Sunon Sales.
*Specifications subject to change without notice. Please Visit SUNON web site at http://www.sunon.com for update information.

40x40x6 mm

5.5~5.9 CFM

MAGLev by SUNON	P/N	Bearing ● VAPO	Rating Voltage (VDC)	Power Current (AMP)	Power Consumption (WATTS)	Speed (RPM)	Air Flow (CFM)	Static Pressure (Inch-H_2O)	Noise (dBA)	Weight (g)	Curve
GM0504PEV1-8	GN	●	5	0.09	0.5	7000	5.9	0.10	32	7.5	1
GM0504PEV2-8	GN	●	5	0.07	0.4	6000	5.5	0.08	26	7.5	2

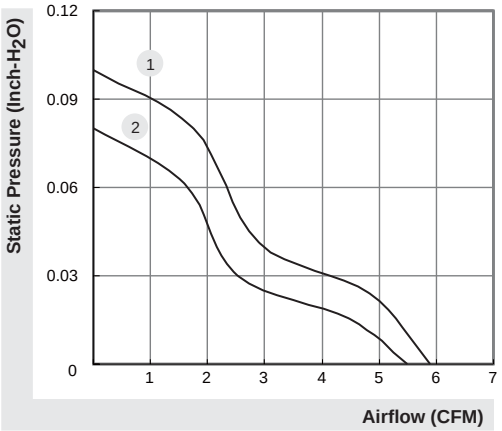

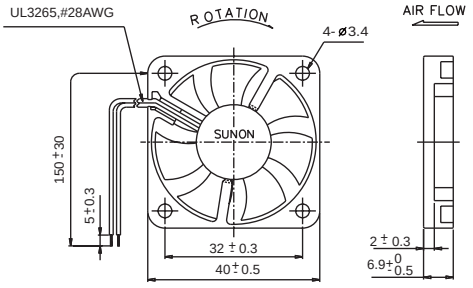

(Units : mm)

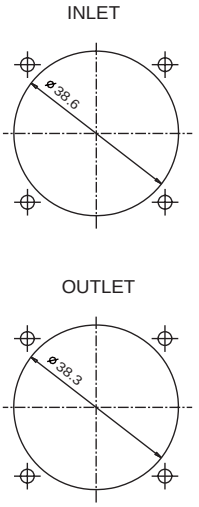

*All model could be customized. Please contact with Sunon Sales.
*Specifications subject to change without notice. Please Visit SUNON web site at http://www.sunon.com for update information.

40x40x10 mm

7.0~8.0 CFM

MAGLev by SUNON	P/N	Bearing ● VAPO	Rating Voltage (VDC)	Power Current (AMP)	Power Consumption (WATTS)	Speed (RPM)	Air Flow (CFM)	Static Pressure (Inch-H_2O)	Noise (dBA)	Weight (g)	Curve
KDE0504PFV1	11.MS.A.GN	●	5	0.24	1.2	7000	8.0	0.19	32	17	1
KDE0504PFV2	11.MS.A.GN	●	5	0.14	0.7	5800	7.0	0.13	27	17	2
KDE1204PFV1	11.MS.A.GN	●	12	0.09	1.1	7000	8.0	0.19	32	17	1
KDE1204PFV2	11.MS.A.GN	●	12	0.08	1.0	5800	7.0	0.13	27	17	2

Model	P/N	◐ 2BALL ○ Sleeve	(VDC)	(AMP)	(WATTS)	(RPM)	(CFM)	(Inch-H_2O)	(dBA)	(g)	Curve
KD0504PFS1	11.GN	○	5	0.26	1.3	7000	8.0	0.19	32	17	1
KD0504PFS2	11.GN	○	5	0.161	0.8	5800	7.0	0.13	27	17	2
KD1204PFS1	11.GN	○	12	0.106	1.3	7000	8.0	0.19	32	17	1
KD1204PFS2	11.GN	○	12	0.092	1.1	5800	7.0	0.13	27	17	2

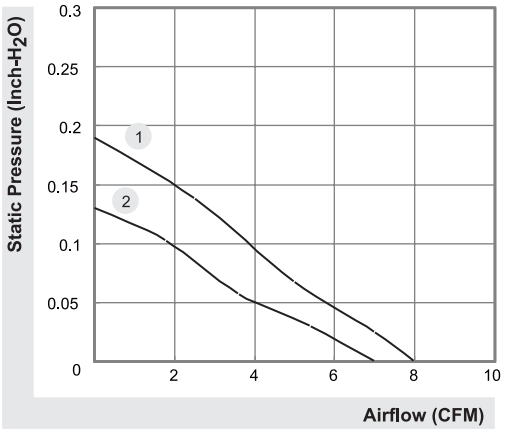

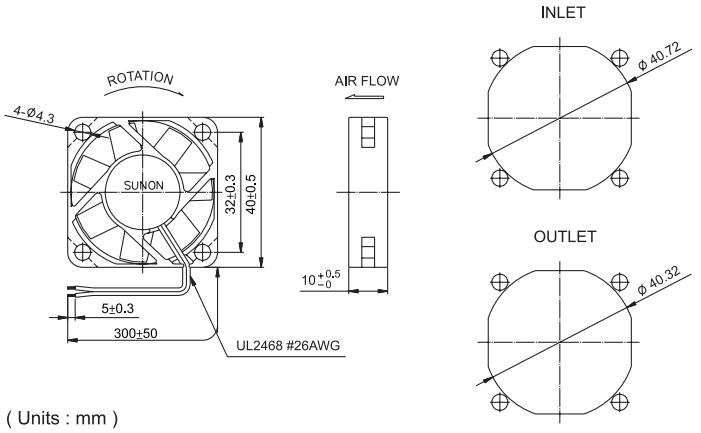

(Units : mm)

*All model could be customized. Please contact with Sunon Sales.
*Specifications subject to change without notice. Please Visit SUNON web site at http://www.sunon.com for update information.

40x40x15 mm

14 CFM

NEW

Model	P/N	Bearing ◉ 2BALL ○ Sleeve	Rating Voltage (VDC)	Power Current (AMP)	Power Consumption (WATTS)	Speed (RPM)	Air Flow (CFM)	Static Pressure (Inch-H_2O)	Noise (dBA)	Weight (g)	Curve
PSD1204PHB1-A	(2).Z.GN	◉	12	0.24	2.9	12000	14	0.63	44.2	25.85	1

* PWM available.

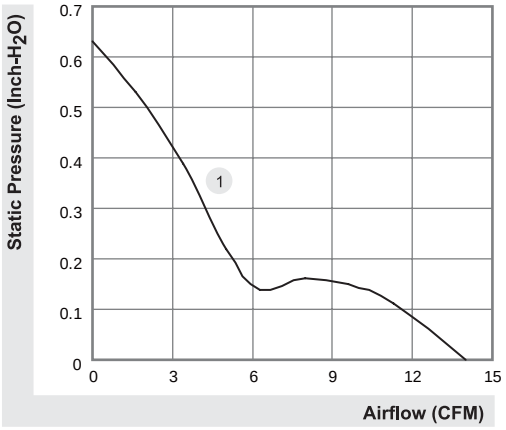

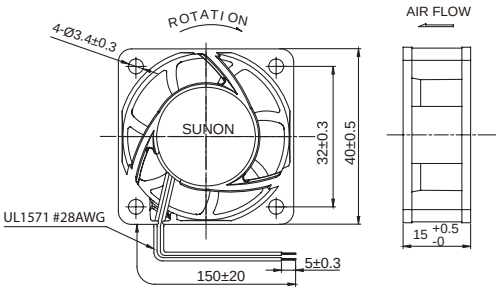

(Units : mm)

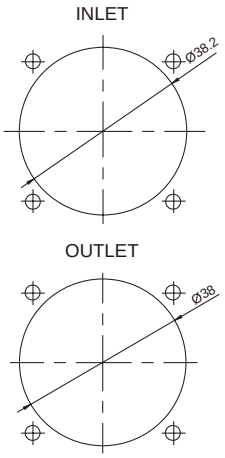

*All model could be customized. Please contact with Sunon Sales.
*Specifications subject to change without notice. Please Visit SUNON web site at http://www.sunon.com for update information.

40x40x20 mm

6.3~10.8 CFM

MAGLev by SUNON	P/N	Bearing ● VAPO	Rating Voltage (VDC)	Power Current (AMP)	Power Consumption (WATTS)	Speed (RPM)	Air Flow (CFM)	Static Pressure (Inch-H_2O)	Noise (dBA)	Weight (g)	Curve
KDE0504PKV1	MS.A.GN	●	5	0.19	1.1	7200	8.9	0.21	25.5	30	2
KDE0504PKV2	MS.A.GN	●	5	0.12	0.6	6200	7.7	0.16	21.0	30	3
KDE0504PKV3	MS.A.GN	●	5	0.08	0.4	5200	6.3	0.11	18.0	30	4
KDE1204PKVX	MS.A.GN	●	12	0.12	1.4	8200	10.8	0.27	27.5	31	1
KDE1204PKV1	MS.A.GN	●	12	0.07	0.8	7200	8.9	0.21	25.5	31	2
KDE1204PKV2	MS.A.GN	●	12	0.05	0.6	6200	7.7	0.16	21.0	31	3
KDE1204PKV3	MS.A.GN	●	12	0.03	0.4	5200	6.3	0.11	18.0	31	4
KDE2404PKVX	MS.A.GN	●	24	0.064	1.5	8200	10.8	0.27	27.5	31	1
KDE2404PKV1	MS.A.GN	●	24	0.05	1.2	7200	8.9	0.21	25.5	31	2
KDE2404PKV2	MS.A.GN	●	24	0.033	0.8	6200	7.7	0.16	21.0	31	3

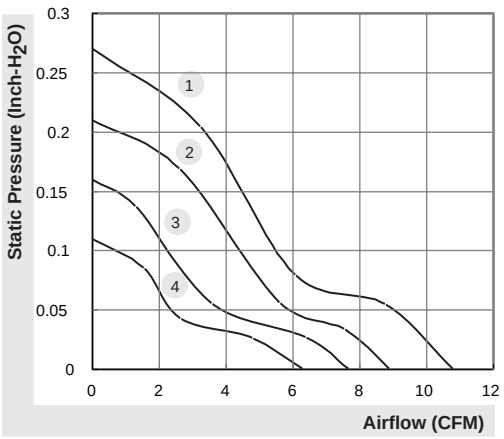

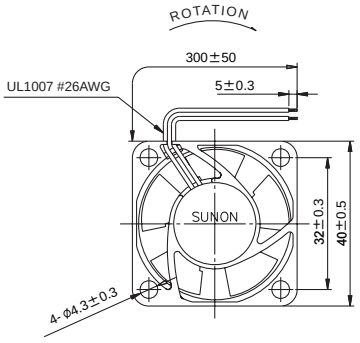

(Units : mm)

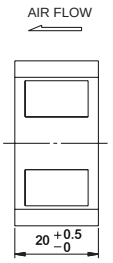

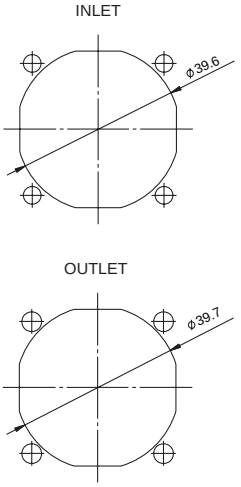

*All model could be customized. Please contact with Sunon Sales.
*Specifications subject to change without notice. Please Visit SUNON web site at http://www.sunon.com for update information.

40x40x20 mm

6.3~10.8 CFM

Model	P/N	Bearing ◐ 2BALL ○ Sleeve	Rating Voltage (VDC)	Power Current (AMP)	Power Consumption (WATTS)	Speed (RPM)	Air Flow (CFM)	Static Pressure (Inch-H_2O)	Noise (dBA)	Weight (g)	Curve
KD0504PKB1	(2).GN	◐	5	0.223	1.1	7200	8.9	0.21	26.5	30	2
KD0504PKB2	(2).GN	◐	5	0.142	0.7	6200	7.7	0.16	22.0	30	3
KD0504PKB3	(2).GN	◐	5	0.091	0.5	5200	6.3	0.11	19.0	30	4
KD0504PKS1	GN	○	5	0.218	1.1	7200	8.9	0.21	25.5	30	2
KD0504PKS2	GN	○	5	0.14	0.7	6200	7.7	0.16	21.0	30	3
KD0504PKS3	GN	○	5	0.09	0.5	5200	6.3	0.11	18.0	30	4
KD1204PKBX	(2).GN	◐	12	0.124	1.5	8200	10.8	0.27	28.5	31	1
KD1204PKB1	(2).GN	◐	12	0.08	1.0	7200	8.9	0.21	26.5	31	2
KD1204PKB2	(2).GN	◐	12	0.062	0.7	6200	7.7	0.16	22.0	31	3
KD1204PKB3	(2).GN	◐	12	0.044	0.5	5200	6.3	0.11	19.0	31	4
KD2404PKSX	GN	○	24	0.12	1.4	8200	10.8	0.27	27.5	31	1
KD2404PKS1	GN	○	24	0.08	1.0	7200	8.9	0.21	25.5	31	2
KD2404PKS2	GN	○	24	0.063	0.8	6200	7.7	0.16	21.0	31	3
KD2404PKS3	GN	○	24	0.045	0.5	5200	6.3	0.11	18.0	31	4

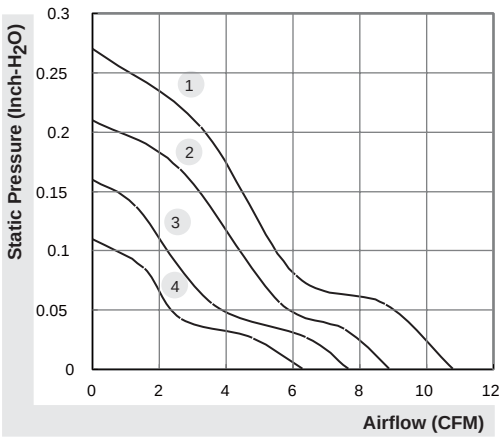

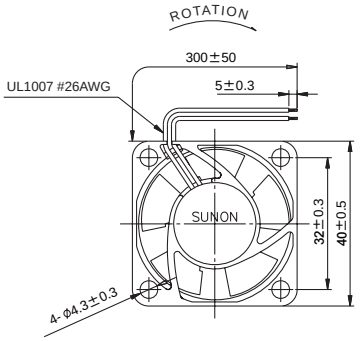

(Units : mm)

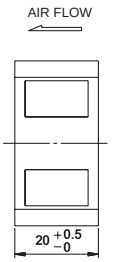

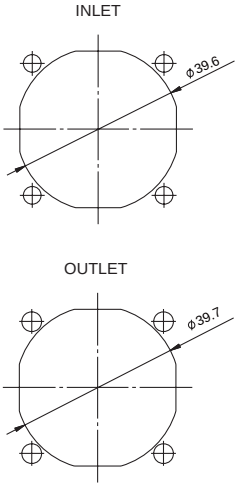

*All model could be customized. Please contact with Sunon Sales.
*Specifications subject to change without notice. Please Visit SUNON web site at http://www.sunon.com for update information.

40x40x24 mm

21.6 CFM

Model	P/N	Bearing ◉ 2BALL ○ Sleeve	Rating Voltage (VDC)	Power Current (AMP)	Power Consumption (WATTS)	Speed (RPM)	Air Flow (CFM)	Static Pressure (Inch-H_2O)	Noise (dBA)	Weight (g)	Curve
PSD1204PBB1-A	(2).Z.GN	◉	12	0.5	6.0	14700	21.6	1.23	55.7	80	1

* PWM available.

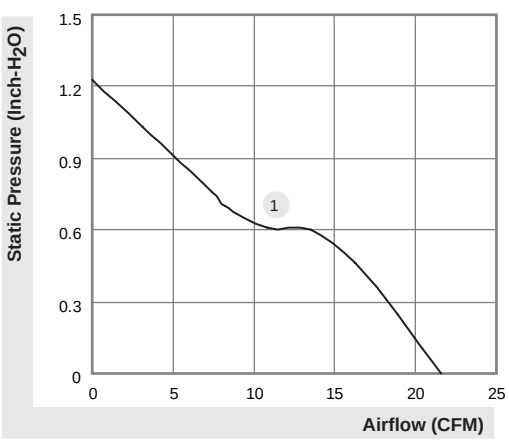

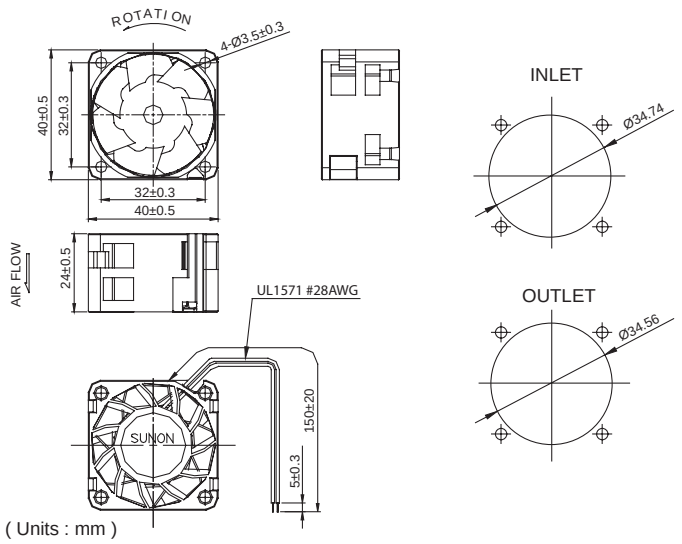

*All model could be customized. Please contact with Sunon Sales.
*Specifications subject to change without notice. Please Visit SUNON web site at http://www.sunon.com for update information.

40x40x28 mm

23.4 CFM

Model	P/N	Bearing ◉ 2BALL ○ Sleeve	Rating Voltage (VDC)	Power Current (AMP)	Power Consumption (WATTS)	Speed (RPM)	Air Flow (CFM)	Static Pressure (Inch-H_2O)	Noise (dBA)	Weight (g)	Curve
PSD1204PQBX-A	(2).Z.GN	◉	12	0.8	9.6	19000	23.4	2.01	59.9	43	1

* PWM available.

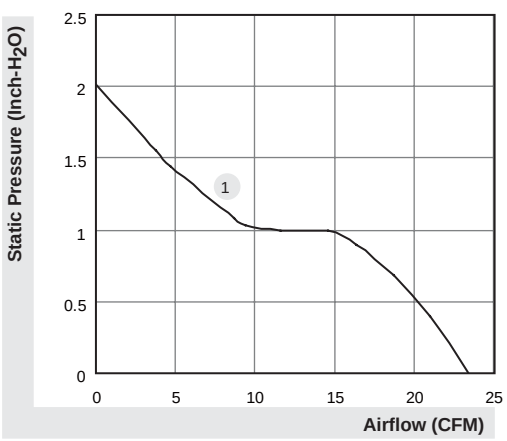

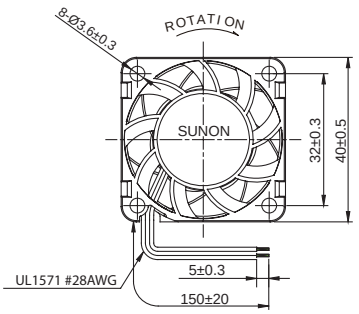

(Units : mm)

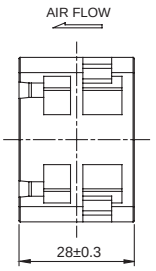

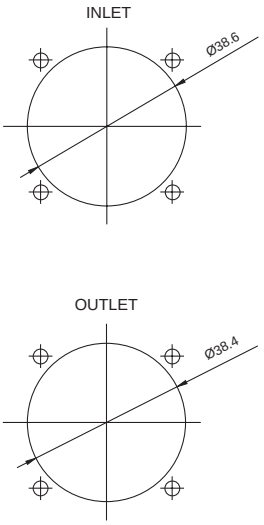

*All model could be customized. Please contact with Sunon Sales.
*Specifications subject to change without notice. Please Visit SUNON web site at http://www.sunon.com for update information.

40x40x56 mm

26.7 CFM

Model	P/N	Bearing ◉ 2BALL ○ Sleeve	Rating Voltage (VDC)	Power Current (AMP)	Power Consumption (WATTS)	Speed (RPM)	Air Flow (CFM)	Static Pressure (Inch-H_2O)	Noise (dBA)	Weight (g)	Curve
PMD1204PPBX-A	(2).Z.GN	◉	12	1.09	13.1	17600/13500	26.7	2.33	66.6	86	1

* PWM available.

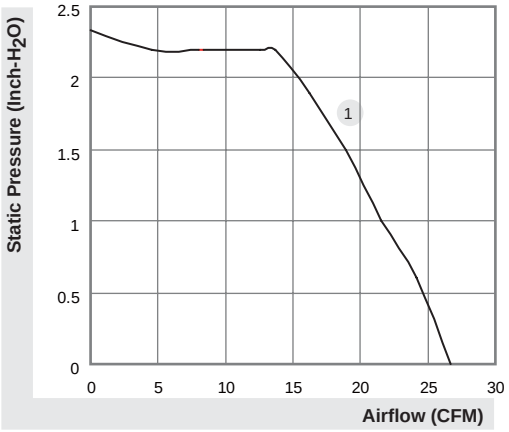

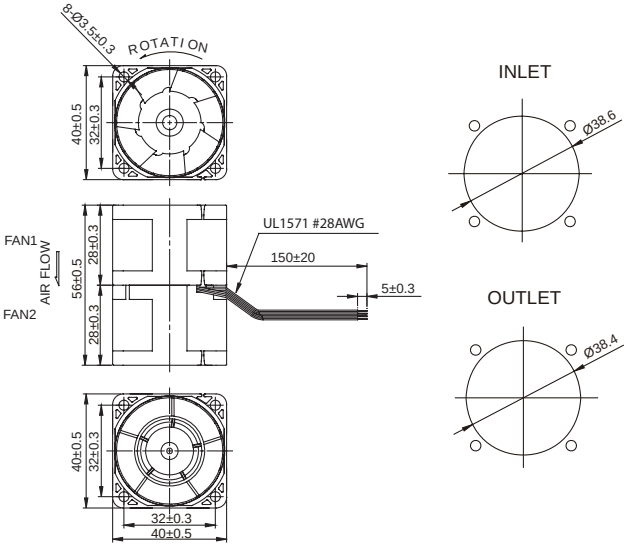

(Units : mm)

*All model could be customized. Please contact with Sunon Sales.
*Specifications subject to change without notice. Please Visit SUNON web site at http://www.sunon.com for update information.

45x45x10 mm

9.2~11 CFM

MAGLev by SUNON	P/N	Bearing ● VAPO	Rating Voltage (VDC)	Power Current (AMP)	Power Consumption (WATTS)	Speed (RPM)	Air Flow (CFM)	Static Pressure (Inch-H_2O)	Noise (dBA)	Weight (g)	Curve
KDE0545PFV1	11.MS.A.GN	●	5	0.25	1.3	6000	11.0	0.17	32	19.0	1
KDE0545PFV2	11.MS.A.GN	●	5	0.15	0.8	5000	9.2	0.12	27	19.0	2
KDE1245PFV1	11.MS.A.GN	●	12	0.10	1.2	6000	11.0	0.17	32	18.5	1
KDE1245PFV2	11.MS.A.GN	●	12	0.08	1.0	5000	9.2	0.12	27	18.5	2

Model	P/N	◐ 2BALL ○ Sleeve	(VDC)	(AMP)	(WATTS)	(RPM)	(CFM)	(Inch-H_2O)	(dBA)	(g)	Curve
KD0545PFS1	11.GN	○	5	0.279	1.4	6000	11.0	0.17	32	19.0	1
KD0545PFS2	11.GN	○	5	0.172	0.9	5000	9.2	0.12	27	19.0	2
KD1245PFS1	11.GN	○	12	0.114	1.4	6000	11.0	0.17	32	18.5	1
KD1245PFS2	11.GN	○	12	0.097	1.2	5000	9.2	0.12	27	18.5	2

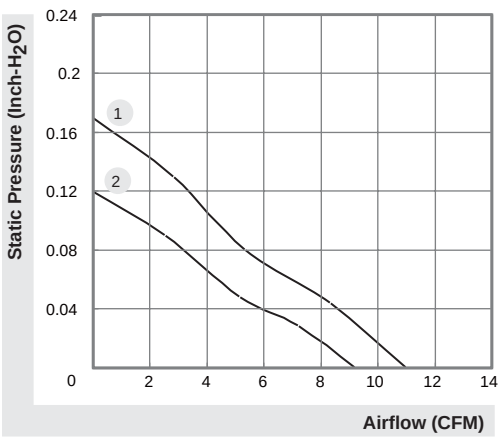

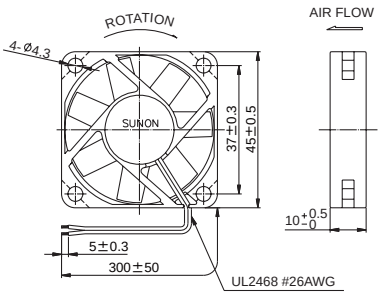

(Units : mm)

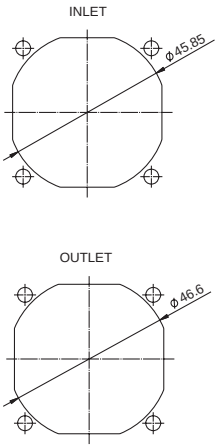

*All model could be customized. Please contact with Sunon Sales.
*Specifications subject to change without notice. Please Visit SUNON web site at http://www.sunon.com for update information.

50x50x10 mm

11~13 CFM

MAGLev by SUNON	P/N	Bearing ● VAPO	Rating Voltage (VDC)	Power Current (AMP)	Power Consumption (WATTS)	Speed (RPM)	Air Flow (CFM)	Static Pressure (Inch-H_2O)	Noise (dBA)	Weight (g)	Curve
KDE0505PFV1	11.MS.A.GN	●	5	0.27	1.4	5200	13.0	0.14	30	21	1
KDE0505PFV2	11.MS.A.GN	●	5	0.16	0.8	4300	11.0	0.11	26	21	2
KDE1205PFV1	11.MS.A.GN	●	12	0.11	1.3	5200	13.0	0.14	30	20	1
KDE1205PFV2	11.MS.A.GN	●	12	0.09	1.1	4300	11.0	0.11	26	20	2

Model	P/N	◐ 2BALL ○ Sleeve	(VDC)	(AMP)	(WATTS)	(RPM)	(CFM)	(Inch-H_2O)	(dBA)	(g)	Curve
KD0505PFS1	11.GN	○	5	0.297	1.5	5200	13.0	0.14	30	21	1
KD0505PFS2	11.GN	○	5	0.181	0.9	4300	11.0	0.11	26	21	2
KD1205PFS1	11.GN	○	12	0.12	1.4	5200	13.0	0.14	30	20	1
KD1205PFS2	11.GN	○	12	0.104	1.2	4300	11.0	0.11	26	20	2

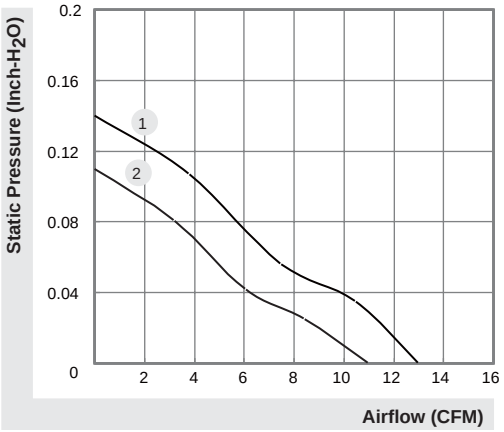

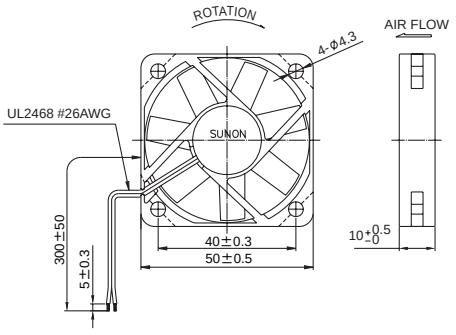

(Units : mm)

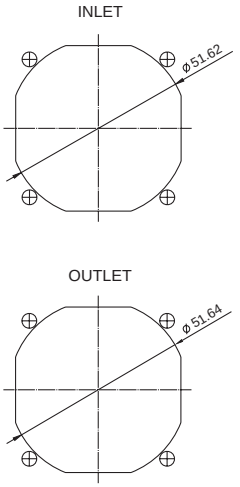

*All model could be customized. Please contact with Sunon Sales.
*Specifications subject to change without notice. Please Visit SUNON web site at http://www.sunon.com for update information.

50x50x15 mm

10.2~17 CFM

MAGLev by SUNON	P/N	Bearing ● VAPO	Rating Voltage (VDC)	Power Current (AMP)	Power Consumption (WATTS)	Speed (RPM)	Air Flow (CFM)	Static Pressure (Inch-H_2O)	Noise (dBA)	Weight (g)	Curve
KDE1205PHV1	MS.A.GN.C1500	●	12	0.087	1.0	5800	17.0	0.23	33	38	1
KDE1205PHV2	MS.A.GN.C1500	●	12	0.054	0.7	4700	13.0	0.17	29	38	2
KDE1205PHV3	MS.A.GN.C1500	●	12	0.035	0.5	3700	10.2	0.12	22	38	3
KDE2405PHV1	MS.A.GN.C1500	●	24	0.063	1.5	5800	17.0	0.23	33	39	1
KDE2405PHV2	MS.A.GN.C1500	●	24	0.042	1.0	4700	13.0	0.17	29	39	2

Model	P/N	◐ 2BALL ○ Sleeve	(VDC)	(AMP)	(WATTS)	(RPM)	(CFM)	(Inch-H_2O)	(dBA)	(g)	Curve
KD1205PHB1	(2).GN.C1500	◐	12	0.127	1.5	5800	17.0	0.23	33	38	1
KD1205PHB2	(2).GN.C1500	◐	12	0.081	1.0	4700	13.0	0.17	29	38	2
KD1205PHB3	(2).GN.C1500	◐	12	0.055	0.7	3700	10.2	0.12	22	38	3
KD2405PHB1	(2).GN.C1500	◐	24	0.08	1.9	5800	17.0	0.23	33	39	1
KD2405PHB2	(2).GN.C1500	◐	24	0.054	1.3	4700	13.0	0.17	29	39	2
KD1205PHS1	GN.C1500	○	12	0.129	1.6	5800	17.0	0.23	34	38	1
KD1205PHS2	GN.C1500	○	12	0.078	0.9	4700	13.0	0.17	30	38	2
KD1205PHS3	GN.C1500	○	12	0.055	0.7	3700	10.2	0.12	23	38	3
KD2405PHS1	GN.C1500	○	24	0.076	1.8	5800	17.0	0.23	34	39	1
KD2405PHS2	GN.C1500	○	24	0.053	1.3	4700	13.0	0.17	30	39	2

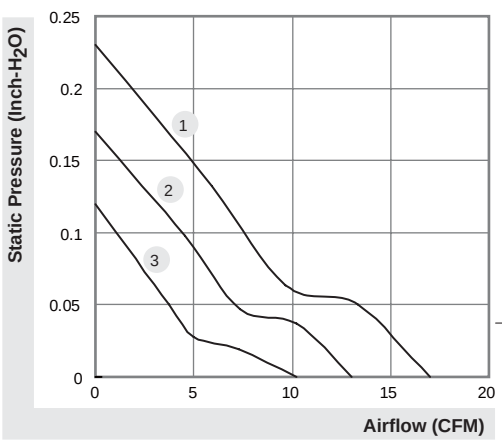

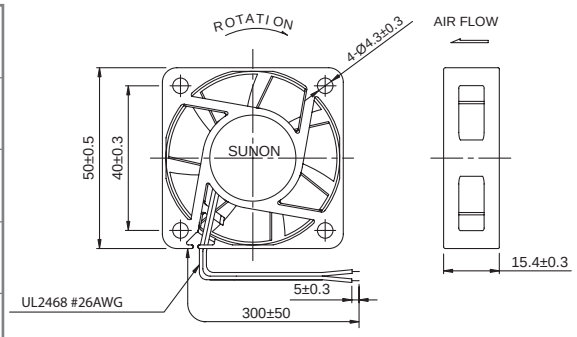

(Units : mm)

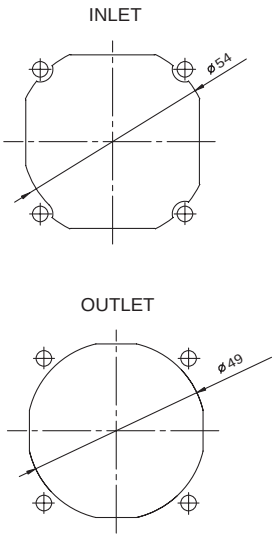

*All model could be customized. Please contact with Sunon Sales.
*Specifications subject to change without notice. Please Visit SUNON web site at http://www.sunon.com for update information.

55x55x15 mm

21.1 CFM

MAGLev by SUNON	P/N	Bearing ● VAPO	Rating Voltage (VDC)	Power Current (AMP)	Power Consumption (WATTS)	Speed (RPM)	Air Flow (CFM)	Static Pressure (Inch-H_2O)	Noise (dBA)	Weight (g)	Curve
GM1255PHV1-A	13.Z.X.GN	●	12	0.13	1.6	6400	21.1	0.25	39.8	29	1

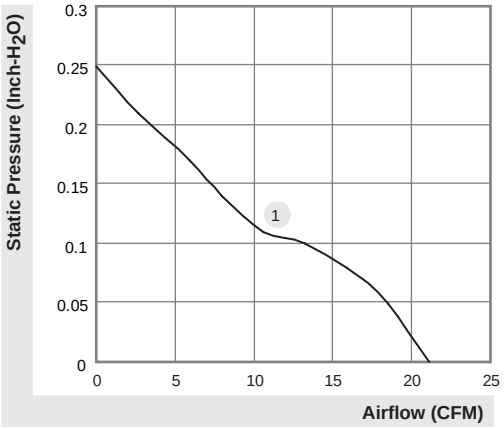

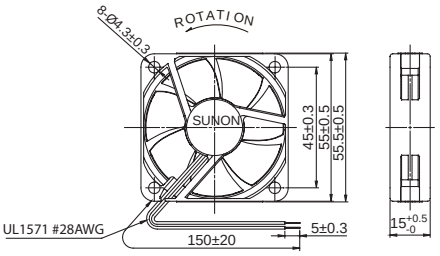

(Units : mm)

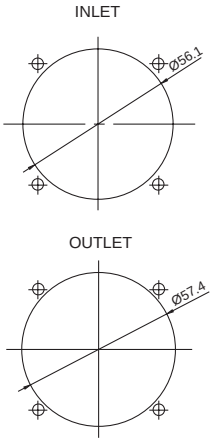

*All model could be customized. Please contact with Sunon Sales.
*Specifications subject to change without notice. Please Visit SUNON web site at http://www.sunon.com for update information.

60x60x15 mm

15~21 CFM

MAGLev by SUNON	P/N	Bearing ● VAPO	Rating Voltage (VDC)	Power Current (AMP)	Power Consumption (WATTS)	Speed (RPM)	Air Flow (CFM)	Static Pressure (Inch-H_2O)	Noise (dBA)	Weight (g)	Curve
KDE0506PHV2	MS.A.GN	●	5	0.18	0.9	3800	18	0.14	31	44	2
KDE0506PHV3	MS.A.GN	●	5	0.10	0.5	3000	15	0.12	25	44	3
KDE1206PHV1	MS.A.GN	●	12	0.13	1.6	4300	21	0.18	36	42	1
KDE1206PHV2	MS.A.GN	●	12	0.08	1.0	3800	18	0.14	31	42	2
KDE1206PHV3	MS.A.GN	●	12	0.05	0.6	3000	15	0.12	25	42	3
KDE2406PHV1	MS.A.GN	●	24	0.077	1.9	4300	21	0.18	36	44	1
KDE2406PHV2	MS.A.GN	●	24	0.054	1.3	3800	18	0.14	31	44	2

Model	P/N	◐ 2BALL ○ Sleeve	(VDC)	(AMP)	(WATTS)	(RPM)	(CFM)	(Inch-H_2O)	(dBA)	(g)	Curve
KD0506PHB2	(2).GN	◐	5	0.195	1.0	3800	18	0.14	32	44	2
KD0506PHB3	(2).GN	◐	5	0.119	0.6	3000	15	0.12	26	44	3
KD0506PHS2	GN	○	5	0.187	0.9	3800	18	0.14	31	44	2
KD0506PHS3	GN	○	5	0.115	0.6	3000	15	0.12	25	44	3
KD1206PHB1	(2).GN	◐	12	0.154	1.9	4300	21	0.18	37	42	1
KD1206PHB2	(2).GN	◐	12	0.094	1.1	3800	18	0.14	32	42	2
KD1206PHB3	(2).GN	◐	12	0.062	0.7	3000	15	0.12	23	42	3
KD1206PHS1	GN	○	12	0.153	1.8	4300	21	0.18	36	42	1
KD1206PHS2	GN	○	12	0.093	1.1	3800	18	0.14	31	42	2
KD1206PHS3	GN	○	12	0.062	0.7	3000	15	0.12	25	42	3
KD2406PHS1	GN	○	24	0.086	2.1	4300	21	0.18	36	44	1
KD2406PHS2	GN	○	24	0.056	1.3	3800	18	0.14	31	44	2

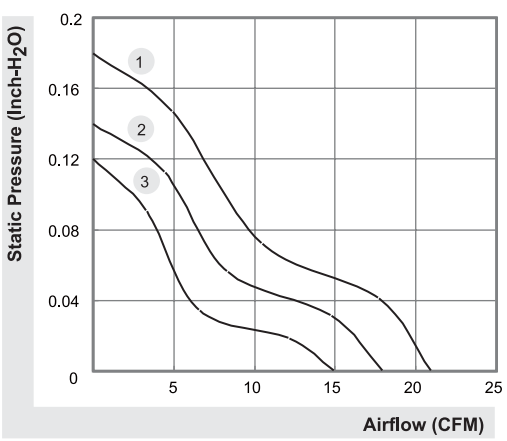

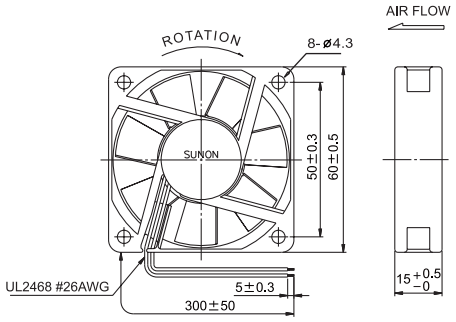

(Units : mm)

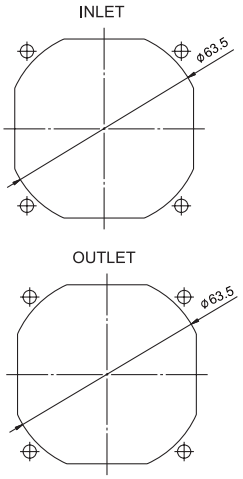

*All model could be customized. Please contact with Sunon Sales.
*Specifications subject to change without notice. Please Visit SUNON web site at http://www.sunon.com for update information.

60x60x20 mm

27.5~30.5 CFM

MAGLev by SUNON	P/N	Bearing ● VAPO	Rating Voltage (VDC)	Power Current (AMP)	Power Consumption (WATTS)	Speed (RPM)	Air Flow (CFM)	Static Pressure (Inch-H_2O)	Noise (dBA)	Weight (g)	Curve
PMD1206PKVX-A	GN	●	12	0.275	3.3	5500	30.5	0.35	40	55	1
PMD1206PKV1-A	GN	●	12	0.228	2.7	5000	27.5	0.28	38	55	2
PMD2406PKVX-A	GN	●	24	0.157	3.8	5500	30.5	0.35	40	55	1
PMD2406PKV1-A	GN	●	24	0.125	3.0	5000	27.5	0.28	38	55	2

Model	P/N	◐ 2BALL ○ Sleeve	(VDC)	(AMP)	(WATTS)	(RPM)	(CFM)	(Inch-H_2O)	(dBA)	(g)	Curve
PMD1206PKBX-A	(2).GN	◐	12	0.274	3.3	5500	30.5	0.35	41	55	1
PMD1206PKB1-A	(2).GN	◐	12	0.22	2.6	5000	27.5	0.28	39	55	2
PMD2406PKBX-A	(2).GN	◐	24	0.151	3.6	5500	30.5	0.35	41	55	1
PMD2406PKB1-A	(2).GN	◐	24	0.122	2.9	5000	27.5	0.28	39	55	2

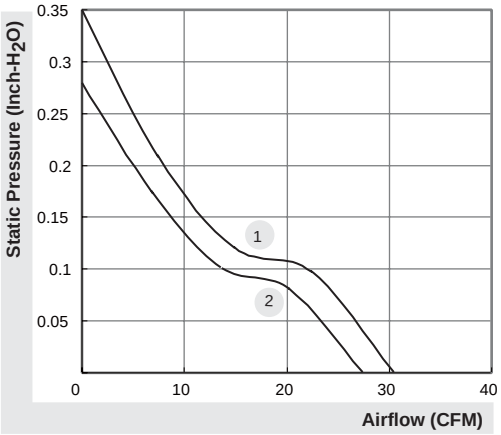

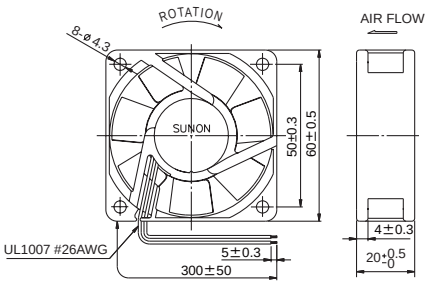

(Units : mm)

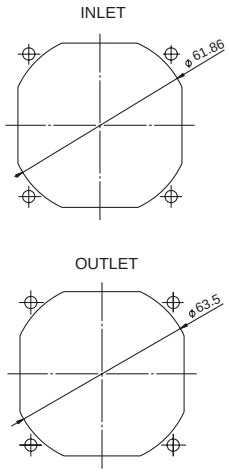

*All model could be customized. Please contact with Sunon Sales.
*Specifications subject to change without notice. Please Visit SUNON web site at http://www.sunon.com for update information.

60x60x20 mm

19~25.5 CFM

MAGLev by SUNON	P/N	Bearing ● VAPO	Rating Voltage (VDC)	Power Current (AMP)	Power Consumption (WATTS)	Speed (RPM)	Air Flow (CFM)	Static Pressure (Inch-H_2O)	Noise (dBA)	Weight (g)	Curve
KDE1206PKV1	MS.A.GN	●	12	0.15	1.8	4500	23.0	0.18	33.5	52	1
KDE1206PKV2	MS.A.GN	●	12	0.07	0.8	3700	19.0	0.14	28.0	52	2
KDE2406PKV1	MS.A.GN	●	24	0.078	1.9	4500	23.0	0.18	33.5	52	1
KDE2406PKV2	MS.A.GN	●	24	0.047	1.1	3700	19.0	0.14	28.0	52	2

Model	P/N	◐ 2BALL ○ Sleeve	(VDC)	(AMP)	(WATTS)	(RPM)	(CFM)	(Inch-H_2O)	(dBA)	(g)	Curve
KD1206PKB1	(2).GN	◐	12	0.154	1.9	4500	23.0	0.18	34.5	52	1
KD1206PKB2	(2).GN	◐	12	0.088	1.1	3700	19.0	0.14	29.0	52	2
KD1206PKS1	GN	○	12	0.154	1.9	4500	23.0	0.18	33.5	52	1
KD1206PKS2	GN	○	12	0.09	1.1	3700	19.0	0.14	28.0	52	2

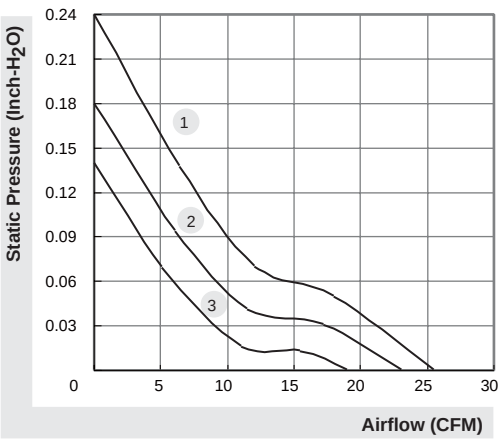

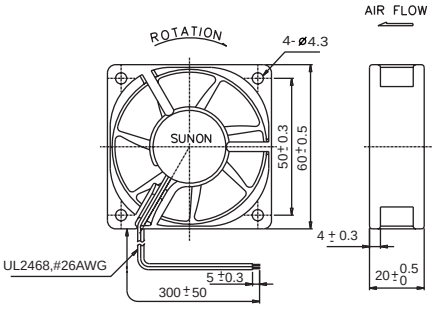

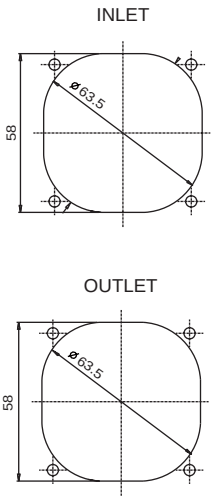

*All model could be customized. Please contact with Sunon Sales.
*Specifications subject to change without notice. Please Visit SUNON web site at http://www.sunon.com for update information.

60x60x25 mm

29~40 CFM

MAGLev by SUNON	P/N	Bearing ● VAPO	Rating Voltage (VDC)	Power Current (AMP)	Power Consumption (WATTS)	Speed (RPM)	Air Flow (CFM)	Static Pressure (Inch-H_2O)	Noise (dBA)	Weight (g)	Curve
PMD1206PTVX-A	U.GN	●	12	0.446	5.4	7600	40.0	0.64	45	75	1
PMD1206PTV1-A	U.GN	●	12	0.357	4.3	6900	36.0	0.54	43	75	2
PMD1206PTV2-A	U.GN	●	12	0.269	3.2	6100	31.5	0.42	41	75	3
PMD1206PTV3-A	U.GN	●	12	0.235	2.8	5600	29.0	0.36	37	75	4
PMD2406PTVX-A	U.GN	●	24	0.207	5.0	7600	40.0	0.64	45	75	1
PMD2406PTV1-A	U.GN	●	24	0.181	4.3	6900	36.0	0.54	43	75	2
PMD2406PTV2-A	U.GN	●	24	0.131	3.1	6100	31.5	0.42	41	75	3
PMD2406PTV3-A	U.GN	●	24	0.114	2.7	5600	29.0	0.36	37	75	4
PMD4806PTVX-A	U.GN	●	48	0.114	5.5	7600	40.0	0.64	45	75	1
PMD4806PTV1-A	U.GN	●	48	0.099	4.8	6900	36.0	0.54	43	75	2
PMD4806PTV2-A	U.GN	●	48	0.078	3.7	6100	31.5	0.42	41	75	3
PMD4806PTV3-A	U.GN	●	48	0.069	3.3	5600	29.0	0.36	37	75	4

Model	P/N	◐ 2BALL ○ Sleeve	(VDC)	(AMP)	(WATTS)	(RPM)	(CFM)	(Inch-H_2O)	(dBA)	(g)	Curve
PMD1206PTBX-A	(2).U.GN	◐	12	0.41	4.9	7600	40.0	0.64	46	75	1
PMD1206PTB1-A	(2).U.GN	◐	12	0.325	3.9	6900	36.0	0.54	44	75	2
PMD1206PTB2-A	(2).U.GN	◐	12	0.258	3.1	6100	31.5	0.42	42	75	3
PMD1206PTB3-A	(2).U.GN	◐	12	0.217	2.6	5600	29.0	0.36	38	75	4
PMD2406PTBX-A	(2).U.GN	◐	24	0.197	4.7	7600	40.0	0.64	46	75	1
PMD2406PTB1-A	(2).U.GN	◐	24	0.158	3.8	6900	36.0	0.54	44	75	2
PMD2406PTB2-A	(2).U.GN	◐	24	0.121	2.9	6100	31.5	0.42	42	75	3
PMD2406PTB3-A	(2).U.GN	◐	24	0.104	2.5	5600	29.0	0.36	38	75	4
PMD4806PTBX-A	(2).U.GN	◐	48	0.112	5.4	7600	40.0	0.64	46	75	1
PMD4806PTB1-A	(2).U.GN	◐	48	0.09	4.3	6900	36.0	0.54	44	75	2
PMD4806PTB2-A	(2).U.GN	◐	48	0.072	3.5	6100	31.5	0.42	42	75	3
PMD4806PTB3-A	(2).U.GN	◐	48	0.068	3.3	5600	29.0	0.36	38	75	4

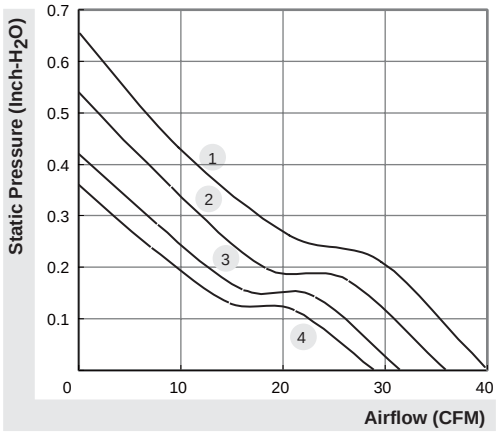

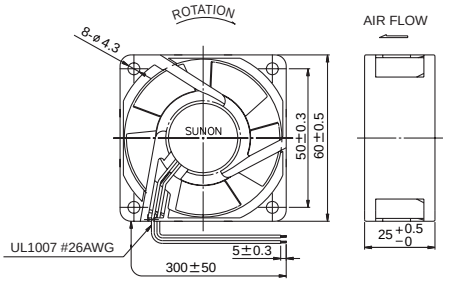

(Units : mm)

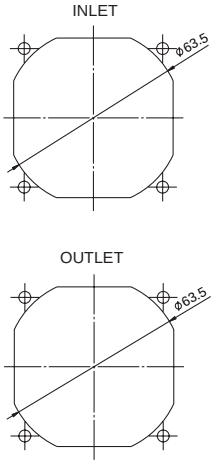

*All model could be customized. Please contact with Sunon Sales.
*Specifications subject to change without notice. Please Visit SUNON web site at http://www.sunon.com for update information.

60x60x25 mm

19.3~27 CFM

MAGLev by SUNON	P/N	Bearing ● VAPO	Rating Voltage (VDC)	Power Current (AMP)	Power Consumption (WATTS)	Speed (RPM)	Air Flow (CFM)	Static Pressure (Inch-H_2O)	Noise (dBA)	Weight (g)	Curve
KDE1206PTVX	MS.A.GN	●	12	0.23	2.8	5200	27.0	0.31	36.5	55	1
KDE1206PTV1	MS.A.GN	●	12	0.14	1.7	4500	23.5	0.21	33.5	55	2
KDE1206PTV2	MS.A.GN	●	12	0.07	0.8	3800	19.3	0.15	29.0	55	3
KDE2406PTVX	MS.A.GN	●	24	0.114	2.7	5200	27.0	0.31	36.5	56	1
KDE2406PTV1	MS.A.GN	●	24	0.079	1.9	4500	23.5	0.21	33.5	56	2
KDE2406PTV2	MS.A.GN	●	24	0.048	1.2	3800	19.3	0.15	29.0	56	3

Model	P/N	◐ 2BALL ○ Sleeve	(VDC)	(AMP)	(WATTS)	(RPM)	(CFM)	(Inch-H_2O)	(dBA)	(g)	Curve
KD1206PTB1	(2).GN	◐	12	0.148	1.8	4500	23.5	0.21	34.5	55	2
KD1206PTB2	(2).GN	◐	12	0.087	1.0	3800	19.3	0.15	30.0	55	3
KD1206PTS1	GN	○	12	0.151	1.8	4500	23.5	0.21	33.5	55	2
KD1206PTS2	GN	○	12	0.089	1.1	3800	19.3	0.15	29.0	55	3

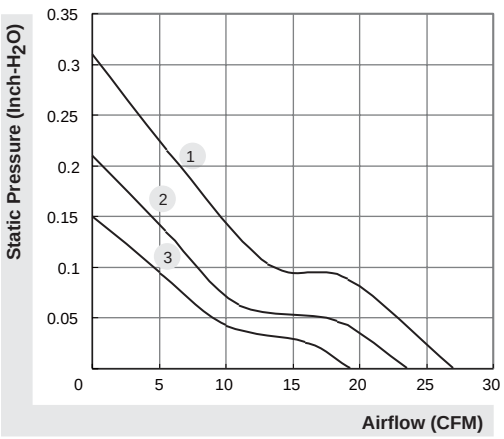

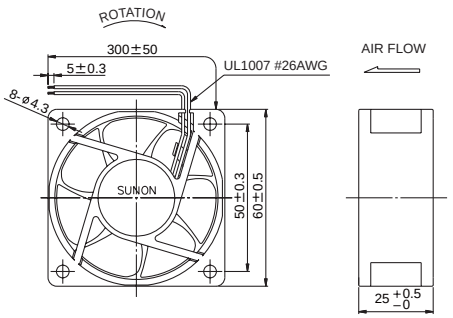

(Units : mm)

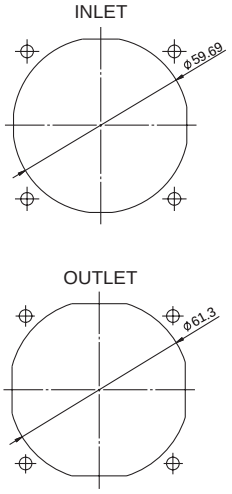

*All model could be customized. Please contact with Sunon Sales.
*Specifications subject to change without notice. Please Visit SUNON web site at http://www.sunon.com for update information.

60x60x38 mm

41.5~56.5 CFM

Model	P/N	Bearing ◉ 2BALL ○ Sleeve	Rating Voltage (VDC)	Power Current (AMP)	Power Consumption (WATTS)	Speed (RPM)	Air Flow (CFM)	Static Pressure (Inch-H_2O)	Noise (dBA)	Weight (g)	Curve
PMD1206PMB1-A	(2).GN	◉	12	0.88	10.6	8000	56.5	0.92	56	90	1
PMD1206PMB2-A	(2).GN	◉	12	0.58	7.0	7000	49.2	0.71	52	90	2
PMD1206PMB3-A	(2).GN	◉	12	0.43	5.2	6000	41.5	0.53	47	90	3
PMD2406PMB1-A	(2).GN	◉	24	0.43	10.3	8000	56.5	0.92	56	90	1
PMD2406PMB2-A	(2).GN	◉	24	0.31	7.4	7000	49.2	0.71	52	90	2
PMD2406PMB3-A	(2).GN	◉	24	0.22	5.3	6000	41.5	0.53	47	90	3
PMD4806PMB1-A	(2).GN	◉	48	0.24	11.5	8000	56.5	0.92	56	90	1
PMD4806PMB2-A	(2).GN	◉	48	0.18	8.6	7000	49.2	0.71	52	90	2
PMD4806PMB3-A	(2).GN	◉	48	0.13	6.2	6000	41.5	0.53	47	90	3

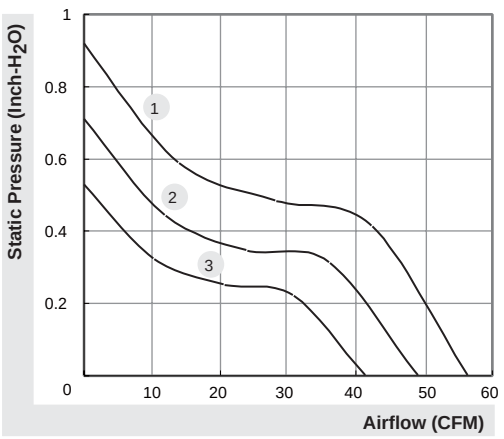

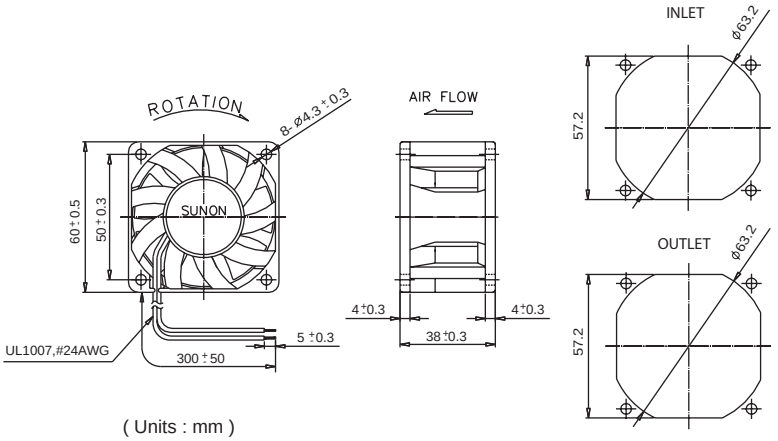

*All model could be customized. Please contact with Sunon Sales.
*Specifications subject to change without notice. Please Visit SUNON web site at http://www.sunon.com for update information.

60x60x60 mm

67 CFM

Model	P/N	Bearing ◉ 2BALL ○ Sleeve	Rating Voltage (VDC)	Power Current (AMP)	Power Consumption (WATTS)	Speed (RPM)	Air Flow (CFM)	Static Pressure (Inch-H_2O)	Noise (dBA)	Weight (g)	Curve
PSD1206PWB1-A	(2).Z.GN	◉	12	1.69	20.3	11500/11000	67.0	2.53	66.3	203	1

* PWM available.

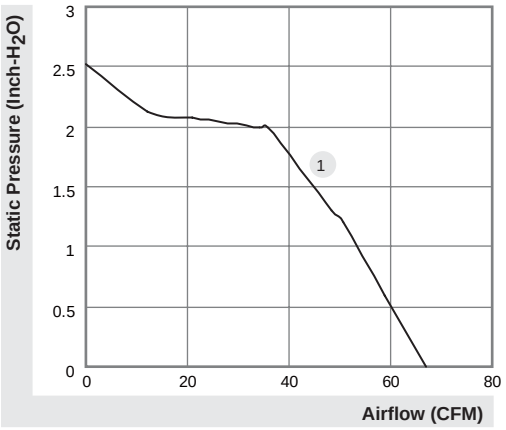

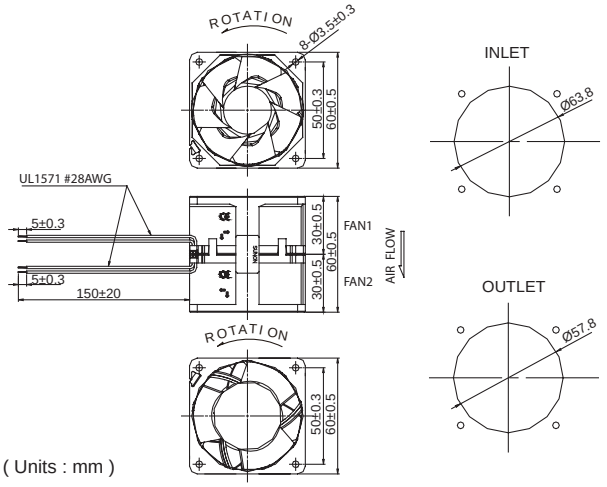

*All model could be customized. Please contact with Sunon Sales.
*Specifications subject to change without notice. Please Visit SUNON web site at http://www.sunon.com for update information.

70x70x15 mm

19~27 CFM

MAGLev by SUNON	P/N	Bearing ● VAPO	Rating Voltage (VDC)	Power Current (AMP)	Power Consumption (WATTS)	Speed (RPM)	Air Flow (CFM)	Static Pressure (Inch-H_2O)	Noise (dBA)	Weight (g)	Curve
KDE0507PHV2	MS.A.GN	●	5	0.2	1.0	2800	23	0.09	26.5	52	2
KDE0507PHV3	MS.A.GN	●	5	0.11	0.6	2300	19	0.07	21.5	52	3
KDE1207PHV1	MS.A.GN	●	12	0.16	1.9	3300	27	0.11	31.5	50	1
KDE1207PHV2	MS.A.GN	●	12	0.09	1.1	2800	23	0.09	26.5	50	2
KDE1207PHV3	MS.A.GN	●	12	0.05	0.6	2300	19	0.07	21.5	50	3
KDE2407PHV1	MS.A.GN	●	24	0.086	2.1	3300	27	0.11	31.5	52	2
KDE2407PHV2	MS.A.GN	●	24	0.054	1.3	2800	23	0.09	26.5	52	3

Model	P/N	◐ 2BALL ○ Sleeve	(VDC)	(AMP)	(WATTS)	(RPM)	(CFM)	(Inch-H_2O)	(dBA)	(g)	Curve
KD0507PHB2	(2).GN	◐	5	0.218	1.1	2800	23	0.09	27.5	52	2
KD0507PHB3	(2).GN	◐	5	0.13	0.7	2300	19	0.07	22.5	52	3
KD0507PHS2	GN	○	5	0.218	1.1	2800	23	0.09	26.5	52	2
KD0507PHS3	GN	○	5	0.131	0.7	2300	19	0.07	21.5	52	3
KD1207PHB1	(2).GN	◐	12	0.173	2.1	3300	27	0.11	32.5	50	1
KD1207PHB2	(2).GN	◐	12	0.104	1.3	2800	23	0.09	27.5	50	2
KD1207PHB3	(2).GN	◐	12	0.066	0.8	2300	19	0.07	22.5	50	3
KD1207PHS1	GN	○	12	0.171	2.1	3300	27	0.11	31.5	50	1
KD1207PHS2	GN	○	12	0.102	1.2	2800	23	0.09	26.5	50	2
KD1207PHS3	GN	○	12	0.067	0.8	2300	19	0.07	21.5	50	3

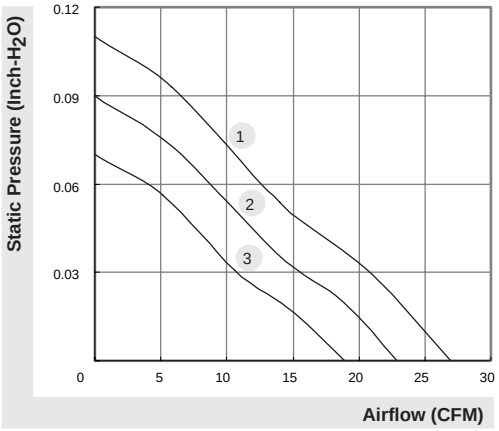

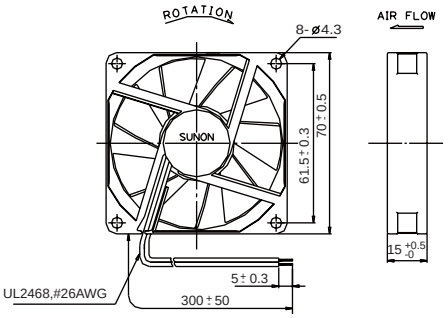

(Units : mm)

INLET

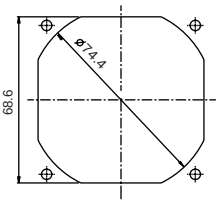

OUTLET

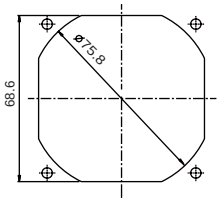

*All model could be customized. Please contact with Sunon Sales.
*Specifications subject to change without notice. Please Visit SUNON web site at http://www.sunon.com for update information.

70x70x20 mm

37~43 CFM

MAGLev by SUNON	P/N	Bearing ● VAPO	Rating Voltage (VDC)	Power Current (AMP)	Power Consumption (WATTS)	Speed (RPM)	Air Flow (CFM)	Static Pressure (Inch-H_2O)	Noise (dBA)	Weight (g)	Curve
PMD1207PKV1-A	GN	●	12	0.39	4.7	4600	43	0.28	41.5	80	1
PMD1207PKV2-A	GN	●	12	0.31	3.7	4300	40	0.24	40.0	80	2
PMD1207PKV3-A	GN	●	12	0.26	3.1	4000	37	0.21	37.5	80	3
PMD2407PKV1-A	GN	●	24	0.21	5.0	4600	43	0.28	41.5	80	1
PMD2407PKV2-A	GN	●	24	0.17	4.1	4300	40	0.24	40.0	80	2
PMD2407PKV3-A	GN	●	24	0.14	3.4	4000	37	0.21	37.5	80	3

Model	P/N	2BALL / Sleeve	(VDC)	(AMP)	(WATTS)	(RPM)	(CFM)	(Inch-H_2O)	(dBA)	(g)	Curve
PMD1207PKB1-A	(2).GN	◐	12	0.39	4.7	4600	43	0.28	42.5	80	1
PMD1207PKB2-A	(2).GN	◐	12	0.31	3.7	4300	40	0.24	41.0	80	2
PMD1207PKB3-A	(2).GN	◐	12	0.26	3.1	4000	37	0.21	38.5	80	3
PMD2407PKB1-A	(2).GN	◐	24	0.21	5.0	4600	43	0.28	42.5	80	1
PMD2407PKB2-A	(2).GN	◐	24	0.17	4.1	4300	40	0.24	41.0	80	2
PMD2407PKB3-A	(2).GN	◐	24	0.14	3.4	4000	37	0.21	38.5	80	3

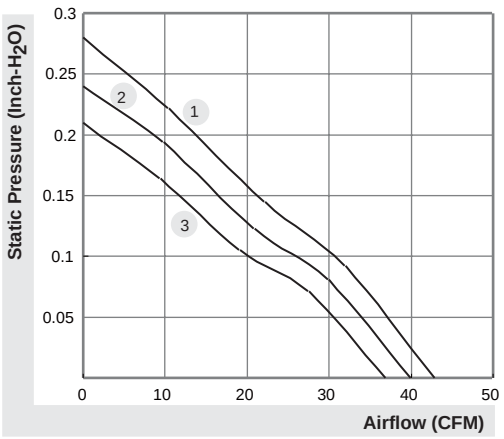

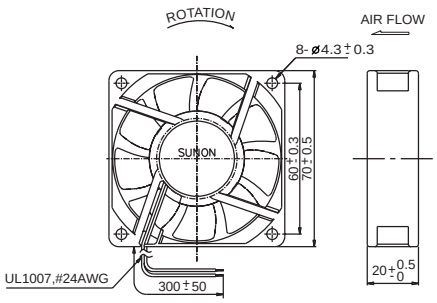

(Units : mm)

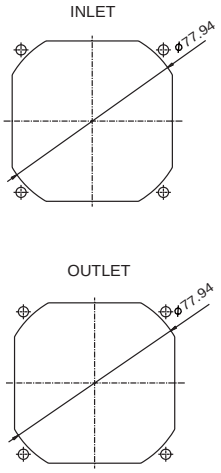

*All model could be customized. Please contact with Sunon Sales.
*Specifications subject to change without notice. Please Visit SUNON web site at http://www.sunon.com for update information.

70x70x20 mm

23.5~29 CFM

MAGLev by SUNON	P/N	Bearing ● VAPO	Rating Voltage (VDC)	Power Current (AMP)	Power Consumption (WATTS)	Speed (RPM)	Air Flow (CFM)	Static Pressure (Inch-H_2O)	Noise (dBA)	Weight (g)	Curve
KDE1207PKV1	13.MS.A.GN	●	12	0.12	1.4	3200	29.0	0.14	33	66	1
KDE1207PKV2	13.MS.A.GN	●	12	0.10	1.2	2900	27.0	0.12	30	66	2
KDE1207PKV3	13.MS.A.GN	●	12	0.07	0.8	2600	23.5	0.09	26	66	3
KDE2407PKV1	13.MS.A.GN	●	24	0.07	1.7	3200	29.0	0.14	33	68	1
KDE2407PKV2	13.MS.A.GN	●	24	0.05	1.2	2900	27.0	0.12	30	68	2
KDE2407PKV3	13.MS.A.GN	●	24	0.04	1.0	2600	23.5	0.09	26	68	3

Model	P/N	◐ 2BALL ○ Sleeve	(VDC)	(AMP)	(WATTS)	(RPM)	(CFM)	(Inch-H_2O)	(dBA)	(g)	Curve
KD1207PKB1	13.(2).GN	◐	12	0.13	1.6	3200	29.0	0.14	33.5	66	1
KD1207PKB2	13.(2).GN	◐	12	0.1	1.2	2900	27.0	0.12	31	66	2
KD1207PKB3	13.(2).GN	◐	12	0.08	1.0	2600	23.5	0.09	27	66	3
KD1207PKS1	13.GN	○	12	0.14	1.7	3200	29.0	0.14	33	66	1
KD1207PKS2	13.GN	○	12	0.11	1.3	2900	27.0	0.12	30	66	2
KD1207PKS3	13.GN	○	12	0.08	1.0	2600	23.5	0.09	26	66	3
KD2407PKB1	13.(2).A.GN	◐	24	0.06	1.4	3200	29.0	0.14	33.5	68	1
KD2407PKB2	13.(2).A.GN	◐	24	0.05	1.2	2900	27.0	0.12	31	68	2
KD2407PKB3	13.(2).A.GN	◐	24	0.04	1.0	2600	23.5	0.09	27	68	3
KD2407PKS1	13.A.GN	○	24	0.06	1.4	3200	29.0	0.14	33	68	1
KD2407PKS2	13.A.GN	○	24	0.05	1.2	2900	27.0	0.12	30	68	2
KD2407PKS3	13.A.GN	○	24	0.04	1.0	2600	23.5	0.09	26	68	3

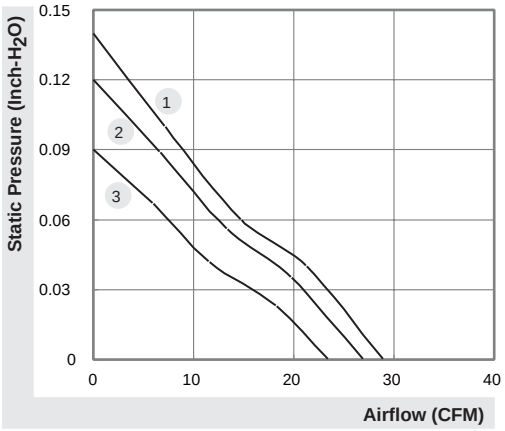

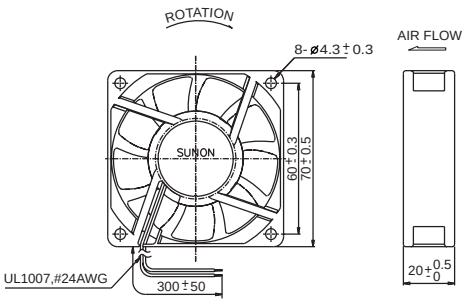

(Units : mm)

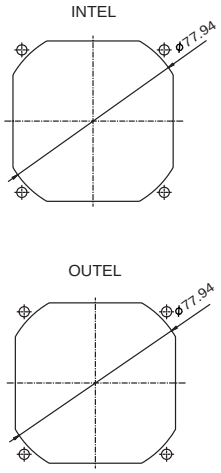

*All model could be customized. Please contact with Sunon Sales.
*Specifications subject to change without notice. Please Visit SUNON web site at http://www.sunon.com for update information.

70x70x25 mm

40~49 CFM

MAGLev by SUNON	P/N	Bearing ● VAPO	Rating Voltage (VDC)	Power Current (AMP)	Power Consumption (WATTS)	Speed (RPM)	Air Flow (CFM)	Static Pressure (Inch-H_2O)	Noise (dBA)	Weight (g)	Curve
PMD1207PTV1-A	GN	●	12	0.37	4.4	5100	49	0.36	44	90	1
PMD1207PTV2-A	GN	●	12	0.32	3.8	4700	45	0.31	42	90	2
PMD1207PTV3-A	GN	●	12	0.25	3.0	4200	40	0.25	38	90	3
PMD2407PTV1-A	GN	●	24	0.20	4.8	5100	49	0.36	44	90	1
PMD2407PTV2-A	GN	●	24	0.16	3.8	4700	45	0.31	42	90	2
PMD2407PTV3-A	GN	●	24	0.13	3.1	4200	40	0.25	38	90	3
PMD4807PTV1-A	GN	●	48	0.12	5.8	5100	49	0.36	44	90	1
PMD4807PTV2-A	GN	●	48	0.11	5.3	4700	45	0.31	42	90	2
PMD4807PTV3-A	GN	●	48	0.09	4.3	4200	40	0.25	38	90	3

Model	P/N	◐ 2BALL ○ Sleeve	(VDC)	(AMP)	(WATTS)	(RPM)	(CFM)	(Inch-H_2O)	(dBA)	(g)	Curve
PMD1207PTB1-A	(2).GN	◐	12	0.37	4.4	5100	49	0.36	45	90	1
PMD1207PTB2-A	(2).GN	◐	12	0.31	3.7	4700	45	0.31	43	90	2
PMD1207PTB3-A	(2).GN	◐	12	0.24	2.9	4200	40	0.25	39	90	3
PMD2407PTB1-A	(2).GN	◐	24	0.19	4.6	5100	49	0.36	45	90	1
PMD2407PTB2-A	(2).GN	◐	24	0.15	3.6	4700	45	0.31	43	90	2
PMD2407PTB3-A	(2).GN	◐	24	0.12	2.9	4200	40	0.25	39	90	3
PMD4807PTB1-A	(2).GN	◐	48	0.12	5.8	5100	49	0.36	45	90	1
PMD4807PTB2-A	(2).GN	◐	48	0.10	4.8	4700	45	0.31	43	90	2
PMD4807PTB3-A	(2).GN	◐	48	0.08	4.3	4200	40	0.25	39	90	3

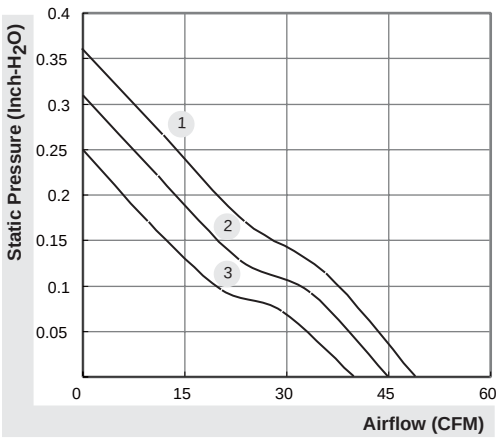

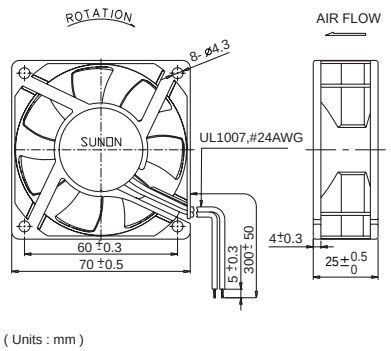

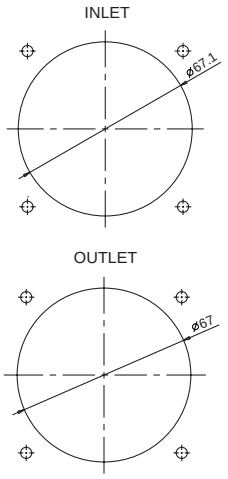

*All model could be customized. Please contact with Sunon Sales.
*Specifications subject to change without notice. Please Visit SUNON web site at http://www.sunon.com for update information.

70x70x25 mm

24~32.5 CFM

MAGLev by SUNON	P/N	Bearing ● VAPO	Rating Voltage (VDC)	Power Current (AMP)	Power Consumption (WATTS)	Speed (RPM)	Air Flow (CFM)	Static Pressure (Inch-H_2O)	Noise (dBA)	Weight (g)	Curve
KDE1207PTV1	13.MS.A.GN	●	12	0.12	1.4	3200	31.0	0.15	32	70	1
KDE1207PTV2	13.MS.A.GN	●	12	0.09	1.1	2900	28.0	0.13	29	70	2
KDE1207PTV3	13.MS.A.GN	●	12	0.06	0.7	2500	24.0	0.10	25	70	3
KDE2407PTV1	13.MS.A.GN	●	24	0.06	1.4	3200	31.0	0.15	32	72	1
KDE2407PTV2	13.MS.A.GN	●	24	0.05	1.2	2900	28.0	0.13	29	72	2
KDE2407PTV3	13.MS.A.GN	●	24	0.04	1.0	2500	24.0	0.10	25	72	3

Model	P/N	◐ 2BALL ○ Sleeve	(VDC)	(AMP)	(WATTS)	(RPM)	(CFM)	(Inch-H_2O)	(dBA)	(g)	Curve
KD1207PTB1	13.(2).GN	◐	12	0.12	1.4	3400	32.5	0.16	33	70	4
KD1207PTB2	13.(2).GN	◐	12	0.1	1.2	3100	29.5	0.14	31	70	5
KD1207PTB3	13.(2).GN	◐	12	0.07	0.8	2700	26.0	0.10	28	70	6
KD1207PTS1	13.GN	○	12	0.13	1.6	3200	31.0	0.15	32	70	1
KD1207PTS2	13.GN	○	12	0.1	1.2	2900	28.0	0.13	29	70	2
KD1207PTS3	13.GN	○	12	0.08	1.0	2500	24.0	0.10	25	70	3
KD2407PTB1	13.(2).GN	◐	24	0.06	1.4	3400	32.5	0.16	33	72	4
KD2407PTB2	13.(2).GN	◐	24	0.05	1.2	3100	29.5	0.14	31	72	5
KD2407PTB3	13.(2).GN	◐	24	0.04	1.0	2700	26.0	0.10	28	72	6
KD2407PTS1	13.GN	○	24	0.06	1.4	3200	31.0	0.15	32	72	1
KD2407PTS2	13.GN	○	24	0.05	1.2	2900	28.0	0.13	29	72	2
KD2407PTS3	13.GN	○	24	0.04	1.0	2500	24.0	0.10	25	72	3

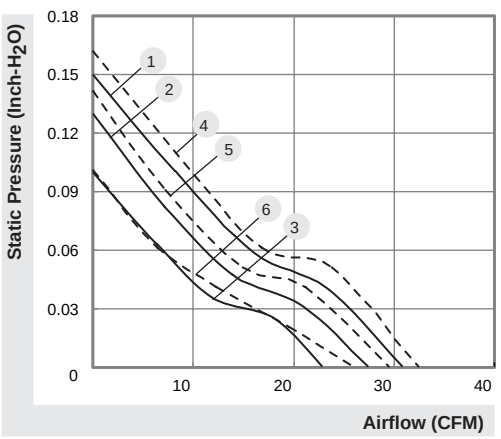

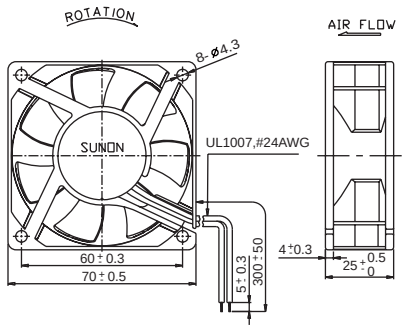

(Units : mm)

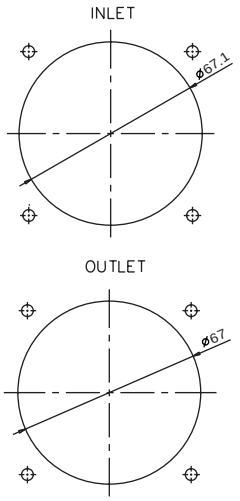

*All model could be customized. Please contact with Sunon Sales.
*Specifications subject to change without notice. Please Visit SUNON web site at http://www.sunon.com for update information.

80x80x15 mm

32~40 CFM

Model	P/N	Bearing ◐ 2BALL ○ Sleeve	Rating Voltage (VDC)	Power Current (AMP)	Power Consumption (WATTS)	Speed (RPM)	Air Flow (CFM)	Static Pressure (Inch-H_2O)	Noise (dBA)	Weight (g)	Curve
KD1208PHB1	13.(2).GN	◐	12	0.21	2.5	3000	40	0.13	35	68	1
KD1208PHB2	13.(2).GN	◐	12	0.13	1.6	2700	36	0.11	32	68	2
KD1208PHB3	13.(2).GN	◐	12	0.1	1.2	2400	32	0.09	29	68	3
KD2408PHB1	13.(2).A.GN	◐	24	0.102	2.5	3000	40	0.13	35	68	1
KD2408PHB2	13.(2).A.GN	◐	24	0.088	2.1	2700	36	0.11	32	68	2
KD2408PHB3	13.(2).A.GN	◐	24	0.073	1.8	2400	32	0.09	29	68	3

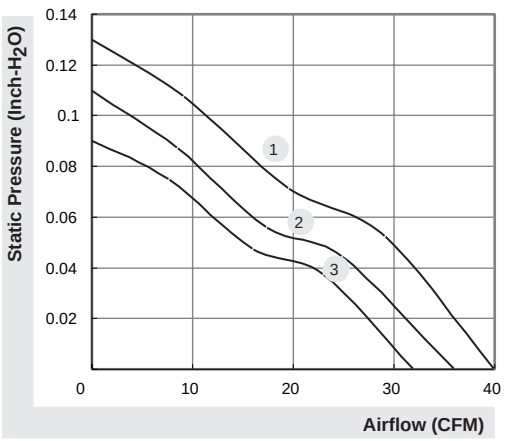

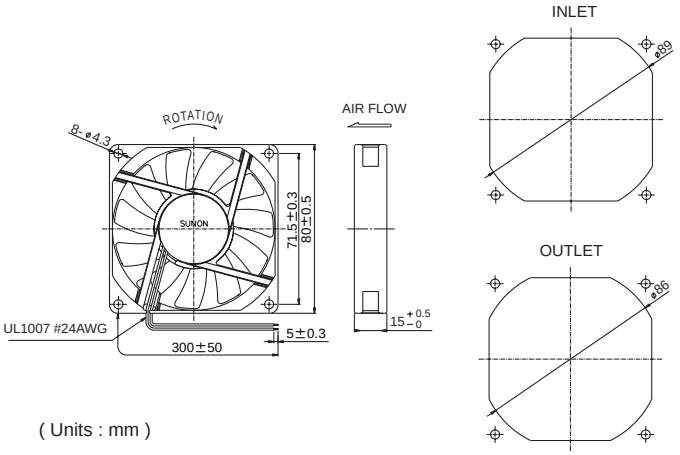

*All model could be customized. Please contact with Sunon Sales.
*Specifications subject to change without notice. Please Visit SUNON web site at http://www.sunon.com for update information.

80x80x20 mm

45~53 CFM

MAGLev by SUNON	P/N	Bearing ● VAPO	Rating Voltage (VDC)	Power Current (AMP)	Power Consumption (WATTS)	Speed (RPM)	Air Flow (CFM)	Static Pressure (Inch-H_2O)	Noise (dBA)	Weight (g)	Curve
PMD1208PKV1-A	GN	●	12	0.39	4.7	4600	53	0.36	48	85	1
PMD1208PKV2-A	GN	●	12	0.31	3.7	4200	49	0.31	45	85	2
PMD1208PKV3-A	GN	●	12	0.26	3.1	3900	45	0.26	43	85	3
PMD2408PKV1-A	GN	●	24	0.21	5.0	4600	53	0.36	48	85	1
PMD2408PKV2-A	GN	●	24	0.17	4.1	4200	49	0.31	45	85	2
PMD2408PKV3-A	GN	●	24	0.14	3.4	3900	45	0.26	43	85	3

Model	P/N	◐ 2BALL ○ Sleeve	(VDC)	(AMP)	(WATTS)	(RPM)	(CFM)	(Inch-H_2O)	(dBA)	(g)	Curve
PMD1208PKB1-A	(2).GN	◐	12	0.39	4.7	4600	53	0.36	49	85	1
PMD1208PKB2-A	(2).GN	◐	12	0.31	3.7	4200	49	0.31	46	85	2
PMD1208PKB3-A	(2).GN	◐	12	0.26	3.1	3900	45	0.26	44	85	3
PMD2408PKB1-A	(2).GN	◐	24	0.21	5.0	4600	53	0.36	49	85	1
PMD2408PKB2-A	(2).GN	◐	24	0.17	4.1	4200	49	0.31	46	85	2
PMD2408PKB3-A	(2).GN	◐	24	0.14	3.4	3900	45	0.26	44	85	3

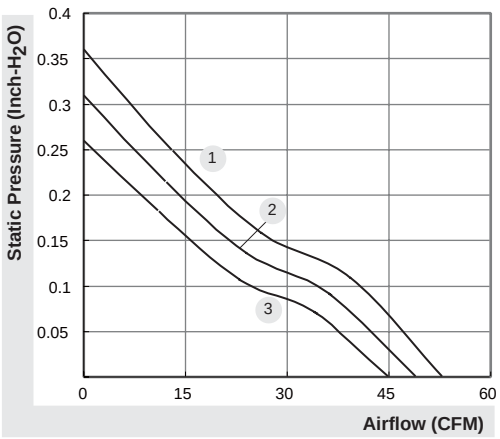

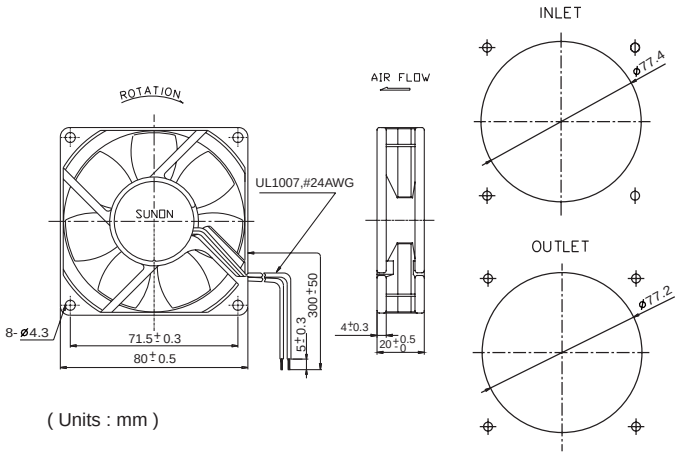

*All model could be customized. Please contact with Sunon Sales.
*Specifications subject to change without notice. Please Visit SUNON web site at http://www.sunon.com for update information.

80x80x20 mm

29~39 CFM

MAGLev by SUNON	P/N	Bearing ● VAPO	Rating Voltage (VDC)	Power Current (AMP)	Power Consumption (WATTS)	Speed (RPM)	Air Flow (CFM)	Static Pressure (Inch-H_2O)	Noise (dBA)	Weight (g)	Curve
KDE1208PKV1	13.MS.A.GN	●	12	0.13	1.6	3200	36	0.18	38	72	1
KDE1208PKV2	13.MS.A.GN	●	12	0.10	1.2	2900	33	0.16	35	72	2
KDE1208PKV3	13.MS.A.GN	●	12	0.07	0.8	2500	29	0.12	30	72	3
KDE2408PKV1	13.MS.A.GN	●	24	0.07	1.7	3200	36	0.18	38	72	1
KDE2408PKV2	13.MS.A.GN	●	24	0.05	1.2	2900	33	0.16	35	72	2
KDE2408PKV3	13.MS.A.GN	●	24	0.04	1.0	2500	29	0.12	30	72	3

Model	P/N	◐ 2BALL ○ Sleeve	(VDC)	(AMP)	(WATTS)	(RPM)	(CFM)	(Inch-H_2O)	(dBA)	(g)	Curve
KD1208PKB1	13.(2).GN	◐	12	0.13	1.6	3300	39	0.19	39	72	4
KD1208PKB2	13.(2).GN	◐	12	0.11	1.3	3000	35	0.17	37	72	5
KD1208PKB3	13.(2).GN	◐	12	0.08	1.0	2600	31	0.14	33	72	6
KD1208PKS1	13.GN	○	12	0.14	1.7	3200	36	0.18	38	72	1
KD1208PKS2	13.GN	○	12	0.11	1.3	2900	33	0.16	35	72	2
KD1208PKS3	13.GN	○	12	0.08	1.0	2500	29	0.12	30	72	3
KD2408PKB1	13.(2).GN	◐	24	0.062	1.5	3300	39	0.19	39	72	4
KD2408PKB2	13.(2).GN	◐	24	0.047	1.1	3000	35	0.17	37	72	5
KD2408PKB3	13.(2).GN	◐	24	0.035	0.8	2600	31	0.14	33	72	6
KD2408PKS1	13.GN	○	24	0.061	1.5	3200	36	0.18	38	72	1
KD2408PKS2	13.GN	○	24	0.05	1.2	2900	33	0.16	35	72	2
KD2408PKS3	13.GN	○	24	0.041	1.0	2500	29	0.12	30	72	3

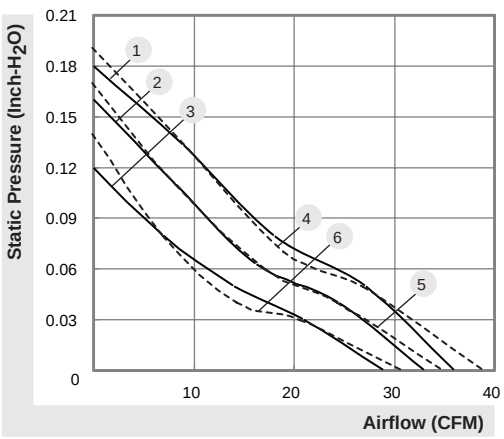

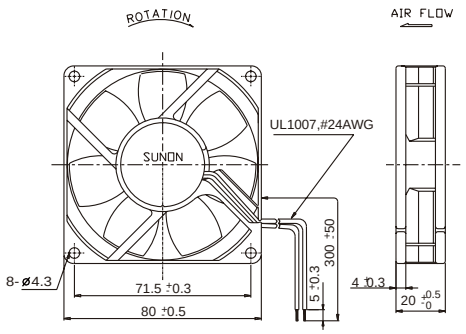

(Units : mm)

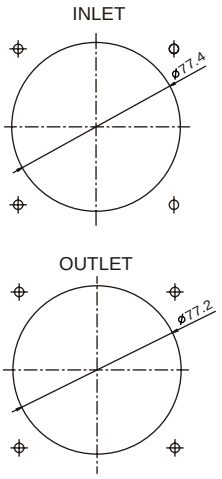

*All model could be customized. Please contact with Sunon Sales.
*Specifications subject to change without notice. Please Visit SUNON web site at http://www.sunon.com for update information.

80x80x25 mm

49~60 CFM

MAGLev by SUNON	P/N	Bearing ● VAPO	Rating Voltage (VDC)	Power Current (AMP)	Power Consumption (WATTS)	Speed (RPM)	Air Flow (CFM)	Static Pressure (Inch-H_2O)	Noise (dBA)	Weight (g)	Curve
PMD1208PTV1-A	GN	●	12	0.42	5.0	4700	60	0.43	46	100	1
PMD1208PTV2-A	GN	●	12	0.34	4.1	4300	55	0.36	44	100	2
PMD1208PTV3-A	GN	●	12	0.27	3.2	3900	49	0.30	41	100	3
PMD2408PTV1-A	GN	●	24	0.22	5.3	4700	60	0.43	46	100	1
PMD2408PTV2-A	GN	●	24	0.17	4.1	4300	55	0.36	44	100	2
PMD2408PTV3-A	GN	●	24	0.14	3.4	3900	49	0.30	41	100	3
PMD4808PTV1-A	GN	●	48	0.13	6.2	4700	60	0.43	46	100	1
PMD4808PTV2-A	GN	●	48	0.11	5.3	4300	55	0.36	44	100	2
PMD4808PTV3-A	GN	●	48	0.09	4.3	3900	49	0.30	41	100	3

Model	P/N	◐ 2BALL ○ Sleeve	(VDC)	(AMP)	(WATTS)	(RPM)	(CFM)	(Inch-H_2O)	(dBA)	(g)	Curve
PMD1208PTB1-A	(2).GN	◐	12	0.40	4.8	4700	60	0.43	47	100	1
PMD1208PTB2-A	(2).GN	◐	12	0.34	4.1	4300	55	0.36	45	100	2
PMD1208PTB3-A	(2).GN	◐	12	0.26	3.1	3900	49	0.30	42	100	3
PMD2408PTB1-A	(2).GN	◐	24	0.21	5.0	4700	60	0.43	47	100	1
PMD2408PTB2-A	(2).GN	◐	24	0.17	4.1	4300	55	0.36	45	100	2
PMD2408PTB3-A	(2).GN	◐	24	0.13	3.1	3900	49	0.30	42	100	3
PMD4808PTB1-A	(2).GN	◐	48	0.13	6.2	4700	60	0.43	47	100	1
PMD4808PTB2-A	(2).GN	◐	48	0.11	5.3	4300	55	0.36	45	100	2
PMD4808PTB3-A	(2).GN	◐	48	0.09	4.3	3900	49	0.30	42	100	3

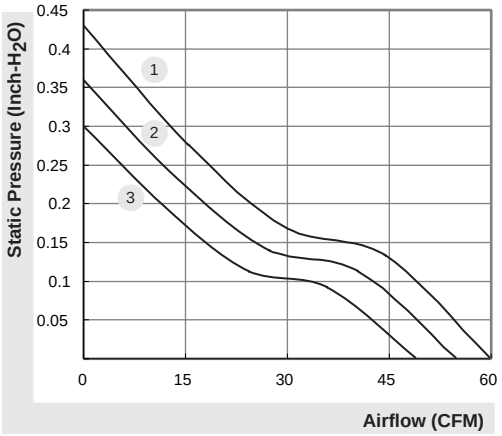

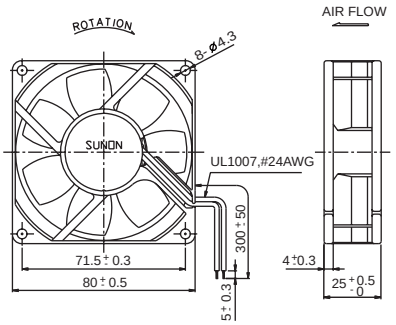

(Units : mm)

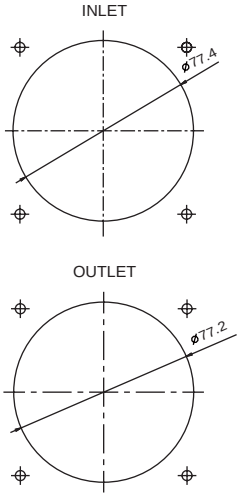

*All model could be customized. Please contact with Sunon Sales.
*Specifications subject to change without notice. Please Visit SUNON web site at http://www.sunon.com for update information.

80x80x25 mm

NEW

53~60 CFM

MAGLev by SUNON	Bearing ● VAPO	Rating Voltage (VDC)	Power Current (AMP)	Power Consumption (WATTS)	Speed (RPM)	Air Flow (CFM)	Static Pressure (Inch-H_2O)	Noise (dBA)	Weight (g)	Curve
PF80251V1-0000-A99	●	12	0.39	4.68	4800	60	0.41	46.5	91	1
PF80251V2-0000-A99	●	12	0.28	3.4	4500	57	0.35	45.0	91	2
PF80251V3-0000-A99	●	12	0.23	2.76	4200	53	0.30	43.5	91	3

Model	◐ 2BALL ○ Sleeve	(VDC)	(AMP)	(WATTS)	(RPM)	(CFM)	(Inch-H_2O)	(dBA)	(g)	Curve
PF80251B1-0000-A99	◐	12	0.39	4.68	4800	60	0.41	47.5	86	1
PF80251B2-0000-A99	◐	12	0.28	3.4	4500	57	0.35	46.0	86	2
PF80251B3-0000-A99	◐	12	0.23	2.76	4200	53	0.30	44.5	86	3

* Preliminary specification for reference.
* PWM available.

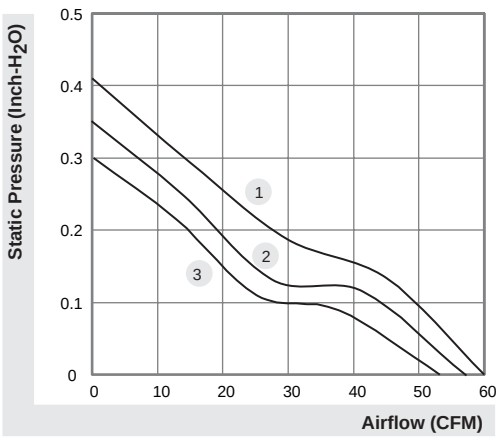

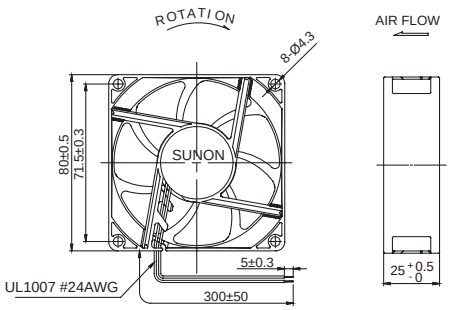

(Units : mm)

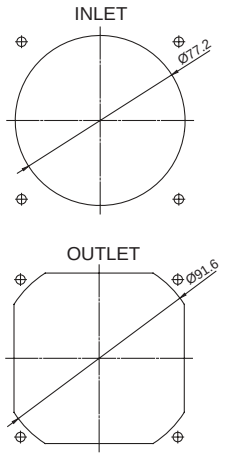

*All model could be customized. Please contact with Sunon Sales.
*Specifications subject to change without notice. Please Visit SUNON web site at http://www.sunon.com for update information.

80x80x25 mm

NEW

33~45 CFM

MAGLev by SUNON	Bearing ● VAPO	Rating Voltage (VDC)	Power Current (AMP)	Power Consumption (WATTS)	Speed (RPM)	Air Flow (CFM)	Static Pressure (Inch-H_2O)	Noise (dBA)	Weight (g)	Curve
ME80251VX-0000-A99	●	12	0.165	1.98	3600	45	0.23	37.0	81	1
ME80251V1-0000-A99	●	12	0.145	1.7	3200	41	0.18	33.0	77	2
ME80251V2-0000-A99	●	12	0.12	1.4	2900	37	0.15	30.0	77	3
ME80251V3-0000-A99	●	12	0.09	1.1	2600	33	0.11	28.0	77	4
ME80252VX-0000-A99	●	24	0.08	1.92	3600	45	0.23	37.0	81	1
ME80252V1-0000-A99	●	24	0.073	1.8	3200	41	0.18	33.0	75	2
ME80252V2-0000-A99	●	24	0.059	1.4	2900	37	0.15	30.0	75	3
ME80252V3-0000-A99	●	24	0.049	1.2	2600	33	0.11	28.0	75	4

Model	◐ 2BALL ○ Sleeve	(VDC)	(AMP)	(WATTS)	(RPM)	(CFM)	(Inch-H_2O)	(dBA)	(g)	Curve
EE80251BX-0000-A99	◐	12	0.172	2.06	3600	45	0.23	38.0	89	1
EE80251B1-0000-A99	◐	12	0.145	1.74	3200	41	0.18	33.0	74	2
EE80251B2-0000-999	◐	12	0.12	1.44	2900	37	0.15	30.0	74	3
EE80251B3-0000-999	◐	12	0.09	1.08	2600	33	0.11	28.0	74	4
EE80252BX-0000-A99	◐	24	0.08	1.92	3600	45	0.23	38.0	89	1
EE80252B1-0000-A99	◐	24	0.073	1.8	3200	41	0.18	33.0	75	2
EE80252B2-0000-999	◐	24	0.059	1.41	2900	37	0.15	30.0	75	3
EE80252B3-0000-999	◐	24	0.046	1.1	2600	33	0.11	28.0	75	4
EE80251S1-0000-A99	○	12	0.145	1.7	3200	41	0.18	33.0	75	2
EE80251S2-0000-999	○	12	0.12	1.4	2900	37	0.15	30.0	75	3
EE80251S3-0000-999	○	12	0.09	1.1	2600	33	0.11	28.0	75	4
EE80252S1-0000-A99	○	24	0.073	1.8	3200	41	0.18	33.0	75	2
EE80252S2-0000-999	○	24	0.059	1.4	2900	37	0.15	30.0	75	3
EE80252S3-0000-999	○	24	0.049	1.2	2600	33	0.11	28.0	75	4

* Preliminary specification for reference.

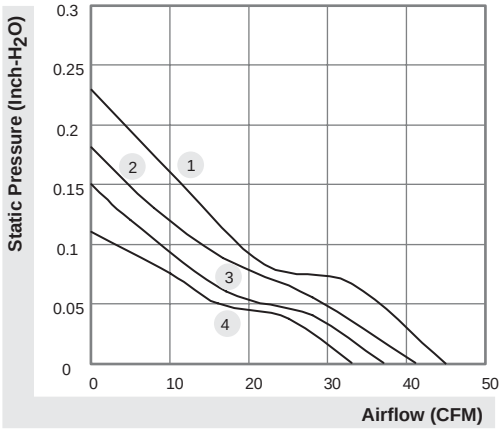

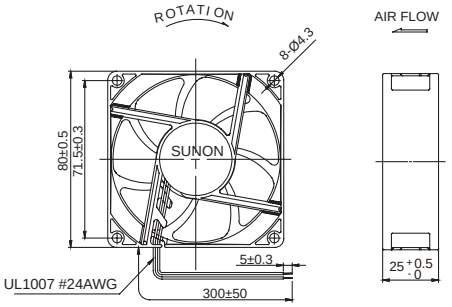

(Units : mm)

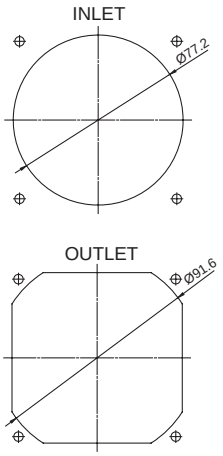

*All model could be customized. Please contact with Sunon Sales.
*Specifications subject to change without notice. Please Visit SUNON web site at http://www.sunon.com for update information.

80x80x32 mm

61.9 CFM

Model	P/N	Bearing ◉ 2BALL ○ Sleeve	Rating Voltage (VDC)	Power Current (AMP)	Power Consumption (WATTS)	Speed (RPM)	Air Flow (CFM)	Static Pressure (Inch-H_2O)	Noise (dBA)	Weight (g)	Curve
PSD1208PLB1-A	(2).Z.GN	◉	12	0.32	3.8	4900	61.9	0.37	45.2	98	1

* Preliminary specification for reference.
* PWM available.

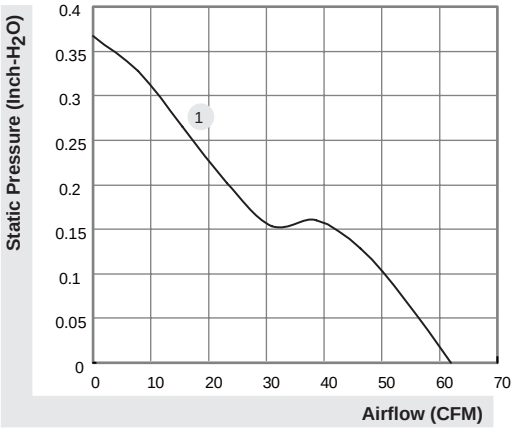

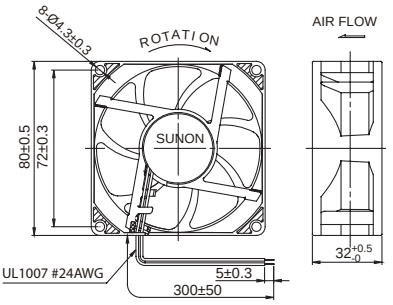

(Units : mm)

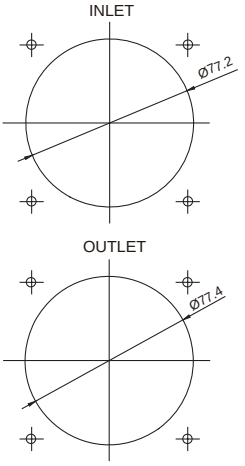

*All model could be customized. Please contact with Sunon Sales.
*Specifications subject to change without notice. Please Visit SUNON web site at http://www.sunon.com for update information.

80x80x38 mm

59.5~84.1 CFM

Model	P/N	Bearing ◉ 2BALL ○ Sleeve	Rating Voltage (VDC)	Power Current (AMP)	Power Consumption (WATTS)	Speed (RPM)	Air Flow (CFM)	Static Pressure (Inch-H_2O)	Noise (dBA)	Weight (g)	Curve
PMD1208PMB1-A	(2).GN	◉	12	0.76	9.1	5700	84.1	0.74	55.2	175	1
PMD1208PMB2-A	(2).GN	◉	12	0.53	6.4	4900	74.5	0.57	51.6	175	2
PMD1208PMB3-A	(2).GN	◉	12	0.37	4.4	4200	59.5	0.43	47.3	175	3
PMD2408PMB1-A	(2).GN	◉	24	0.40	9.6	5700	84.1	0.74	55.2	175	1
PMD2408PMB2-A	(2).GN	◉	24	0.30	7.2	4900	74.5	0.57	51.6	175	2
PMD2408PMB3-A	(2).GN	◉	24	0.20	4.8	4200	59.5	0.43	47.3	175	3
PMD4808PMB1-A	(2).GN	◉	48	0.19	9.1	5700	84.1	0.74	55.2	175	1
PMD4808PMB2-A	(2).GN	◉	48	0.14	6.7	4900	74.5	0.57	51.6	175	2
PMD4808PMB3-A	(2).GN	◉	48	0.10	4.8	4200	59.5	0.43	47.3	175	3

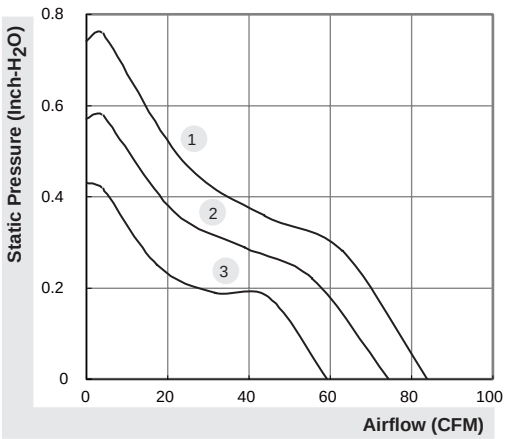

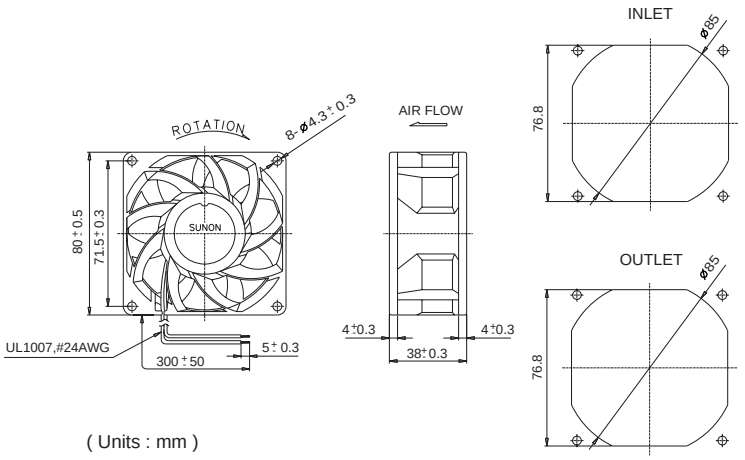

*All model could be customized. Please contact with Sunon Sales.
*Specifications subject to change without notice. Please Visit SUNON web site at http://www.sunon.com for update information.

92x92x25 mm

65~77 CFM

MAGLev by SUNON	P/N	Bearing ● VAPO	Rating Voltage (VDC)	Power Current (AMP)	Power Consumption (WATTS)	Speed (RPM)	Air Flow (CFM)	Static Pressure (Inch-H_2O)	Noise (dBA)	Weight (g)	Curve
PMD1209PTV1-A	GN	●	12	0.47	5.6	4200	77	0.37	47	120	1
PMD1209PTV2-A	GN	●	12	0.40	4.8	3900	73	0.33	44	120	2
PMD1209PTV3-A	GN	●	12	0.31	3.7	3600	65	0.28	42	120	3
PMD2409PTV1-A	GN	●	24	0.25	6.0	4200	77	0.37	47	120	1
PMD2409PTV2-A	GN	●	24	0.20	4.8	3900	73	0.33	44	120	2
PMD2409PTV3-A	GN	●	24	0.16	3.8	3600	65	0.28	42	120	3
PMD4809PTV1-A	GN	●	48	0.15	7.2	4200	77	0.37	47	120	1
PMD4809PTV2-A	GN	●	48	0.12	5.8	3900	73	0.33	44	120	2
PMD4809PTV3-A	GN	●	48	0.09	4.3	3600	65	0.28	42	120	3
			48								

Model	P/N	◐ 2BALL ○ Sleeve	(VDC)	(AMP)	(WATTS)	(RPM)	(CFM)	(Inch-H_2O)	(dBA)	(g)	Curve
PMD1209PTB1-A	(2).GN	◐	12	0.46	5.5	4200	77	0.37	48	120	1
PMD1209PTB2-A	(2).GN	◐	12	0.38	4.6	3900	73	0.33	45	120	2
PMD1209PTB3-A	(2).GN	◐	12	0.30	3.6	3600	65	0.28	43	120	3
PMD2409PTB1-A	(2).GN	◐	24	0.24	5.8	4200	77	0.37	48	120	1
PMD2409PTB2-A	(2).GN	◐	24	0.19	4.6	3900	73	0.33	45	120	2
PMD2409PTB3-A	(2).GN	◐	24	0.15	3.6	3600	65	0.28	43	120	3
PMD4809PTB1-A	(2).GN	◐	48	0.14	6.7	4200	77	0.37	48	120	1
PMD4809PTB2-A	(2).GN	◐	48	0.12	5.8	3900	73	0.33	45	120	2
PMD4809PTB3-A	(2).GN	◐	48	0.09	4.3	3600	65	0.28	43	120	3

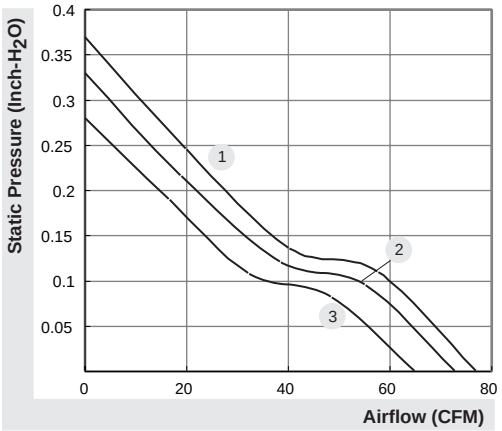

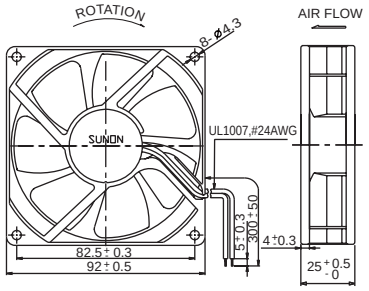

(Units : mm)

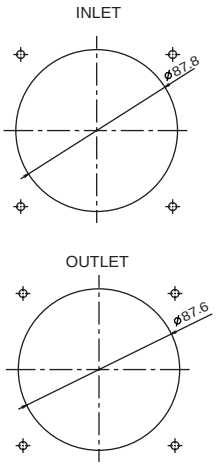

*All model could be customized. Please contact with Sunon Sales.
*Specifications subject to change without notice. Please Visit SUNON web site at http://www.sunon.com for update information.

92x92x25 mm

65~75 CFM

MAGLev by SUNON	Bearing ● VAPO	Rating Voltage (VDC)	Power Current (AMP)	Power Consumption (WATTS)	Speed (RPM)	Air Flow (CFM)	Static Pressure (Inch-H_2O)	Noise (dBA)	Weight (g)	Curve
PF92251V1-0000-A99	●	12	0.37	4.44	4500	75	0.35	46	103	1
PF92251V2-0000-A99	●	12	0.315	3.78	4200	70	0.30	44	103	2
PF92251V3-0000-A99	●	12	0.27	2.76	3900	65	0.25	42	103	3

Model	◐ 2BALL ○ Sleeve	(VDC)	(AMP)	(WATTS)	(RPM)	(CFM)	(Inch-H_2O)	(dBA)	(g)	Curve
PF92251B1-0000-A99	◐	12	0.37	4.44	4500	75	0.35	47	98	1
PF92251B2-0000-A99	◐	12	0.315	3.78	4200	70	0.30	45	98	2
PF92251B3-0000-A99	◐	12	0.27	2.76	3900	65	0.25	43	98	3

* Preliminary specification for reference.
* PWM available.

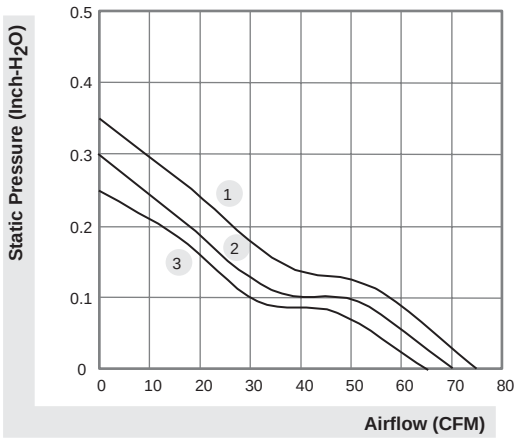

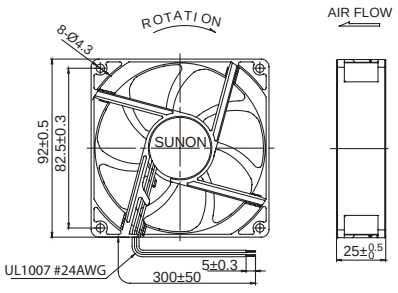

(Units : mm)

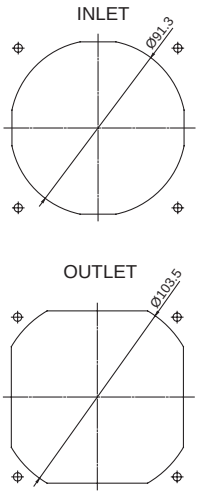

*All model could be customized. Please contact with Sunon Sales.
*Specifications subject to change without notice. Please Visit SUNON web site at http://www.sunon.com for update information.

92x92x25 mm

39.5~55 CFM

NEW

MAGLev by SUNON	Bearing ● VAPO	Rating Voltage (VDC)	Power Current (AMP)	Power Consumption (WATTS)	Speed (RPM)	Air Flow (CFM)	Static Pressure (Inch-H_2O)	Noise (dBA)	Weight (g)	Curve
ME92251VX-0000-A99	●	12	0.18	2.16	3400	55.0	0.21	37.5	103.0	1
ME92251V1-0000-A99	●	12	0.165	2.0	3000	51.5	0.15	34.0	96.0	2
ME92251V2-0000-A99	●	12	0.135	1.6	2700	45.0	0.13	32.0	96.0	3
ME92251V3-0000-A99	●	12	0.105	1.3	2400	39.5	0.10	28.0	96.0	4
ME92252VX-0000-A99	●	24	0.09	2.16	3400	55.0	0.21	37.5	103.0	1
ME92252V1-0000-A99	●	24	0.087	2.1	3000	51.5	0.15	34.0	94.0	2
ME92252V2-0000-A99	●	24	0.068	1.6	2700	45.0	0.13	32.0	94.0	3
ME92252V3-0000-A99	●	24	0.056	1.3	2400	39.5	0.10	28.0	94.0	4

Model	◐ 2BALL ○ Sleeve	(VDC)	(AMP)	(WATTS)	(RPM)	(CFM)	(Inch-H_2O)	(dBA)	(g)	Curve
EE92251BX-0000-A99	◐	12	0.18	2.16	3400	55.0	0.21	37.5	89.0	1
EE92251B1-0000-A99	◐	12	0.165	1.98	3000	51.5	0.15	34.0	96.0	2
EE92251B2-0000-999	◐	12	0.135	1.62	2700	45.0	0.13	32.0	96.0	3
EE92251B3-0000-999	◐	12	0.091	1.26	2400	39.5	0.10	28.0	96.0	4
EE92252BX-0000-A99	◐	24	0.1	2.4	3400	55.0	0.21	37.5	97.4	1
EE92252B1-0000-A99	◐	24	0.087	2.1	3000	51.5	0.15	34.0	96.0	2
EE92252B2-0000-999	◐	24	0.065	1.56	2700	45.0	0.13	32.0	96.0	3
EE92252B3-0000-999	◐	24	0.052	1.25	2400	39.5	0.10	28.0	96.0	4
EE92251S1-0000-A99	○	12	0.165	2.0	3000	51.5	0.15	34.0	94.0	2
EE92251S2-0000-999	○	12	0.135	1.6	2700	45.0	0.13	32.0	94.0	3
EE92251S3-0000-999	○	12	0.105	1.3	2400	39.5	0.10	28.0	94.0	4
EE92252S1-0000-A99	○	24	0.087	2.1	3000	51.5	0.15	34.0	94.0	2
EE92252S2-0000-999	○	24	0.068	1.6	2700	45.0	0.13	32.0	94.0	3
EE92252S3-0000-999	○	24	0.056	1.3	2400	39.5	0.10	28.0	94.0	4

* Preliminary specification for reference.

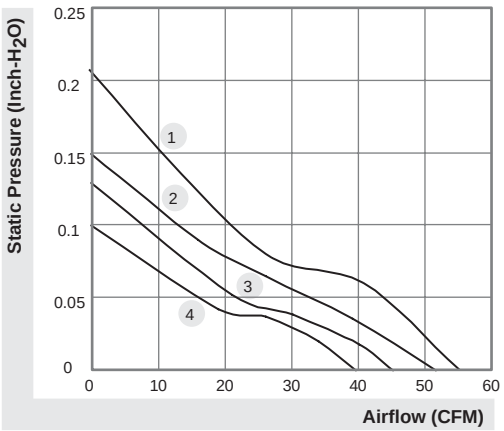

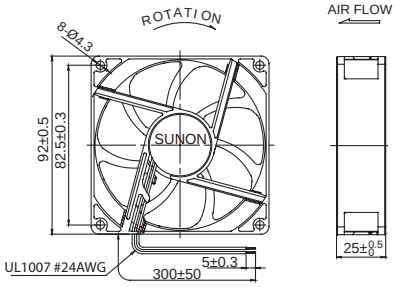

(Units : mm)

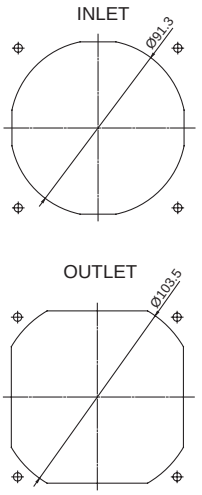

*All model could be customized. Please contact with Sunon Sales.
*Specifications subject to change without notice. Please Visit SUNON web site at http://www.sunon.com for update information.

92x92x32 mm

79 CFM

MAGLev by SUNON	P/N	Bearing ● VAPO	Rating Voltage (VDC)	Power Current (AMP)	Power Consumption (WATTS)	Speed (RPM)	Air Flow (CFM)	Static Pressure (Inch-H_2O)	Noise (dBA)	Weight (g)	Curve
PSD1209PLV2-A	Z.GN	●	12	0.35	4.2	4000	79	0.36	42.1	186	1

* PWM available.

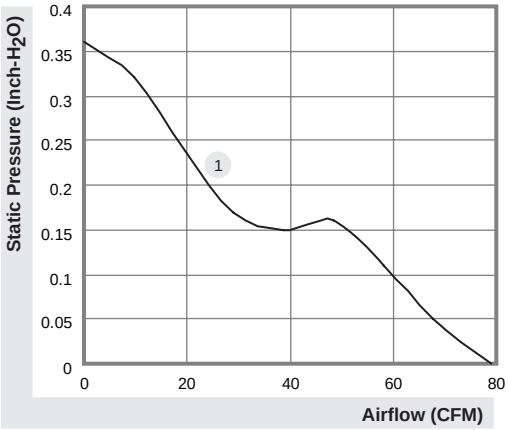

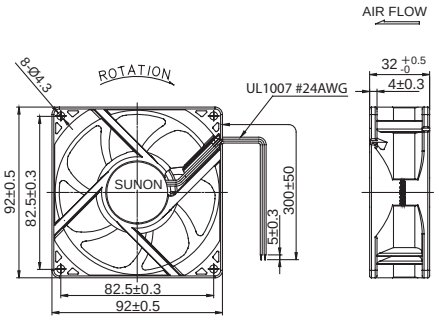

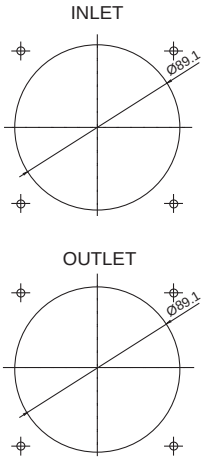

(Units : mm)

*All model could be customized. Please contact with Sunon Sales.
*Specifications subject to change without notice. Please Visit SUNON web site at http://www.sunon.com for update information.

92x92x38 mm

91.7~120.2 CFM

Model	P/N	Bearing ◐ 2BALL ○ Sleeve	Rating Voltage (VDC)	Power Current (AMP)	Power Consumption (WATTS)	Speed (RPM)	Air Flow (CFM)	Static Pressure (Inch-H_2O)	Noise (dBA)	Weight (g)	Curve
PMD1209PMB1-A	(2).GN	◐	12	1.04	12.5	4900	120.2	0.71	57.6	190	1
PMD1209PMB2-A	(2).GN	◐	12	0.71	8.5	4400	106.3	0.56	53.8	190	2
PMD1209PMB3-A	(2).GN	◐	12	0.47	5.6	3800	91.7	0.43	50.3	190	3
PMD2409PMB1-A	(2).GN	◐	24	0.51	12.2	4900	120.2	0.71	57.6	190	1
PMD2409PMB2-A	(2).GN	◐	24	0.40	9.6	4400	106.3	0.56	53.8	190	2
PMD2409PMB3-A	(2).GN	◐	24	0.25	6.0	3800	91.7	0.43	50.3	190	3
PMD4809PMB1-A	(2).GN	◐	48	0.24	11.5	4900	120.2	0.71	57.6	190	1
PMD4809PMB2-A	(2).GN	◐	48	0.16	7.7	4400	106.3	0.56	53.8	190	2
PMD4809PMB3-A	(2).GN	◐	48	0.12	5.8	3800	91.7	0.43	50.3	190	3

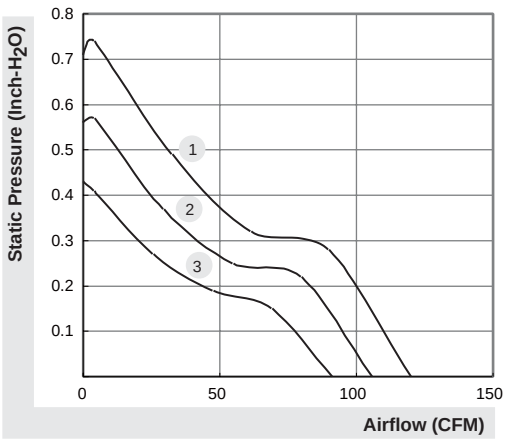

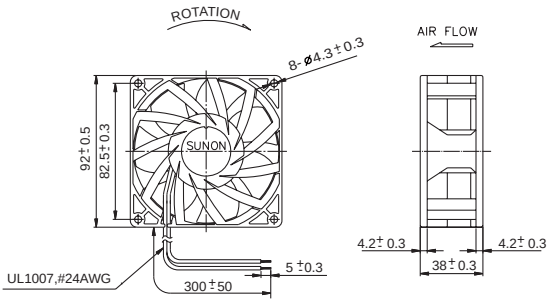

(Units : mm)

*All model could be customized. Please contact with Sunon Sales.
*Specifications subject to change without notice. Please Visit SUNON web site at http://www.sunon.com for update information.

120x120x25 mm

120~150 CFM

Model	P/N	Bearing ◐ 2BALL ○ Sleeve	Rating Voltage (VDC)	Power Current (AMP)	Power Consumption (WATTS)	Speed (RPM)	Air Flow (CFM)	Static Pressure (Inch-H_2O)	Noise (dBA)	Weight (g)	Curve
PMD1212PTB1-A	(2).GN	◐	12	1.0	12.0	4500	150	0.62	54	220	1
PMD1212PTB2-A	(2).GN	◐	12	0.72	8.6	4000	133	0.50	51	220	2
PMD1212PTB3-A	(2).GN	◐	12	0.54	6.5	3600	120	0.41	48	220	3
PMD2412PTB1-A	(2).GN	◐	24	0.49	11.8	4500	150	0.62	54	220	1
PMD2412PTB2-A	(2).GN	◐	24	0.36	8.6	4000	133	0.50	51	220	2
PMD2412PTB3-A	(2).GN	◐	24	0.28	6.7	3600	120	0.41	48	220	3
PMD4812PTB1-A	(2).GN	◐	48	0.26	12.5	4500	150	0.62	54	220	1
PMD4812PTB2-A	(2).GN	◐	48	0.19	9.1	4000	133	0.50	51	220	2
PMD4812PTB3-A	(2).GN	◐	48	0.14	6.7	3600	120	0.41	48	220	3

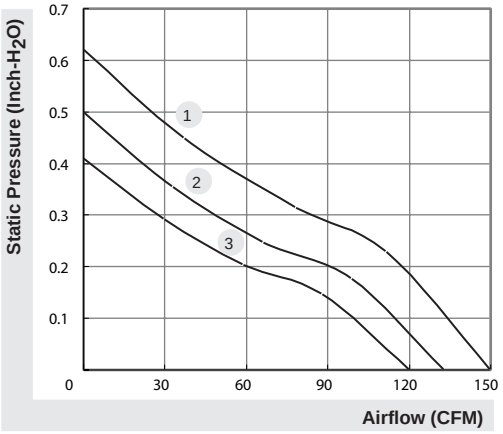

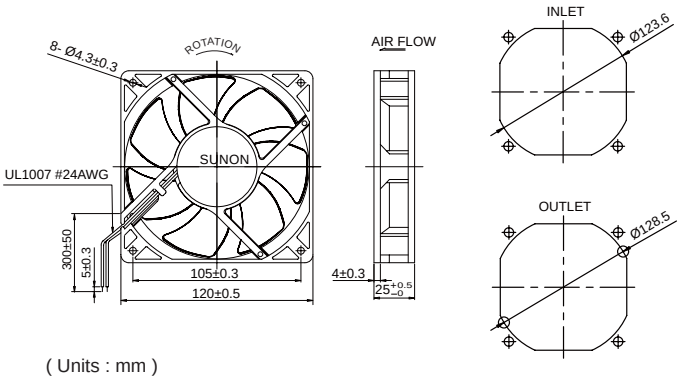

*All model could be customized. Please contact with Sunon Sales.
*Specifications subject to change without notice. Please Visit SUNON web site at http://www.sunon.com for update information.

120x120x25 mm

75~108.2 CFM

MAGLev by SUNON	Bearing ● VAPO	Rating Voltage (VDC)	Power Current (AMP)	Power Consumption (WATTS)	Speed (RPM)	Air Flow (CFM)	Static Pressure (Inch-H_2O)	Noise (dBA)	Weight (g)	Curve
MEC0251V1-0000-A99	●	12	0.455	5.5	3100	108.2	0.28	44.5	162	1
MEC0251V2-0000-A99	●	12	0.315	3.8	2700	93.0	0.22	40.5	162	2
MEC0251V3-0000-A99	●	12	0.19	2.3	2200	75.0	0.16	34.0	162	3
MEC0252V1-0000-A99	●	24	0.225	5.4	3100	108.2	0.28	44.5	162	1
MEC0252V2-0000-A99	●	24	0.15	3.6	2700	93.0	0.22	40.5	162	2
MEC0252V3-0000-A99	●	24	0.092	2.2	2200	75.0	0.16	34.0	162	3
MEC0254V1-0000-A99	●	48	0.125	6.0	3100	108.2	0.28	44.5	162	1
MEC0254V2-0000-A99	●	48	0.09	4.3	2700	93.0	0.22	40.5	162	2
MEC0254V3-0000-A99	●	48	0.055	2.6	2200	75.0	0.16	34.0	162	3

Model	◐ 2BALL ○ Sleeve	(VDC)	(AMP)	(WATTS)	(RPM)	(CFM)	(Inch-H_2O)	(dBA)	(g)	Curve
EEC0251B1-0000-A99	◐	12	0.445	5.3	3100	108.2	0.28	44.5	157	1
EEC0251B2-0000-A99	◐	12	0.3	3.6	2700	93.0	0.22	40.5	157	2
EEC0251B3-0000-A99	◐	12	0.17	2.0	2200	75.0	0.16	34.0	157	3
EEC0252B1-0000-A99	◐	24	0.21	5.0	3100	108.2	0.28	44.5	157	1
EEC0252B2-0000-A99	◐	24	0.145	3.5	2700	93.0	0.22	40.5	157	2
EEC0252B3-0000-A99	◐	24	0.086	2.1	2200	75.0	0.16	34.0	157	3
EEC0254B1-0000-A99	◐	48	0.12	5.8	3100	108.2	0.28	44.5	157	1
EEC0254B2-0000-A99	◐	48	0.08	3.8	2700	93.0	0.22	40.5	157	2
EEC0254B3-0000-A99	◐	48	0.052	2.5	2200	75.0	0.16	34.0	157	3

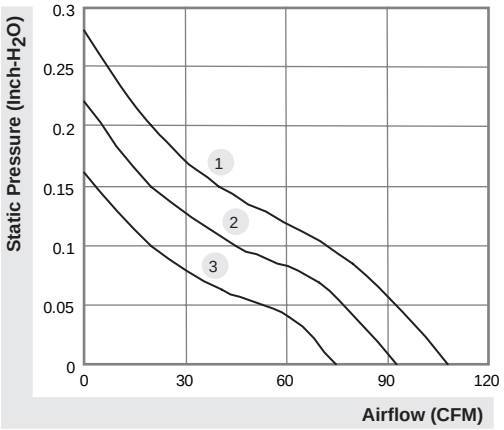

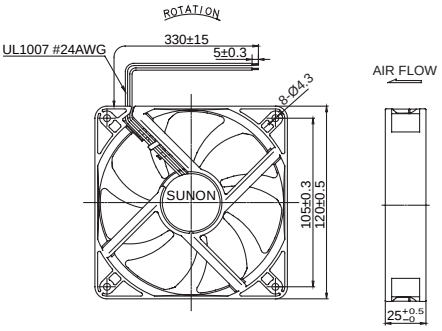

(Units : mm)

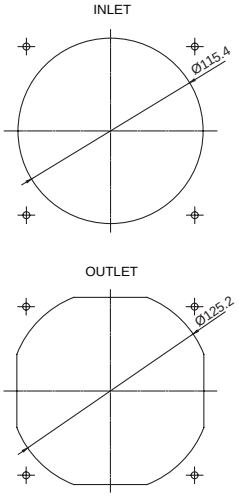

*All model could be customized. Please contact with Sunon Sales.
*Specifications subject to change without notice. Please Visit SUNON web site at http://www.sunon.com for update information.

120x120x38 mm

153~190 CFM

Model	P/N	Bearing ◉ 2BALL ○ Sleeve	Rating Voltage (VDC)	Power Current (AMP)	Power Consumption (WATTS)	Speed (RPM)	Air Flow (CFM)	Static Pressure (Inch-H_2O)	Noise (dBA)	Weight (g)	Curve
PMD1212PMB1-A	(2).GN	◉	12	1.6	19.2	4200	190	0.65	54	330	1
PMD1212PMB2-A	(2).GN	◉	12	1.2	14.4	3800	170	0.54	51	330	2
PMD1212PMB3-A	(2).GN	◉	12	0.83	10.0	3400	153	0.43	48	330	3
PMD2412PMB1-A	(2).GN	◉	24	0.76	18.2	4200	190	0.65	54	330	1
PMD2412PMB2-A	(2).GN	◉	24	0.57	13.7	3800	170	0.54	51	330	2
PMD2412PMB3-A	(2).GN	◉	24	0.42	10.1	3400	153	0.43	48	330	3
PMD4812PMB1-A	(2).GN	◉	48	0.4	19.2	4200	190	0.65	54	330	1
PMD4812PMB2-A	(2).GN	◉	48	0.3	14.4	3800	170	0.54	51	330	2
PMD4812PMB3-A	(2).GN	◉	48	0.22	10.6	3400	153	0.43	48	330	3

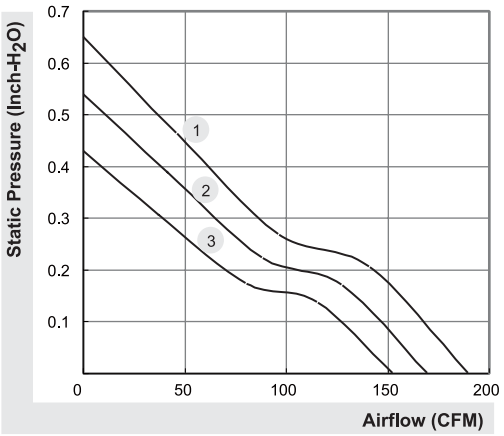

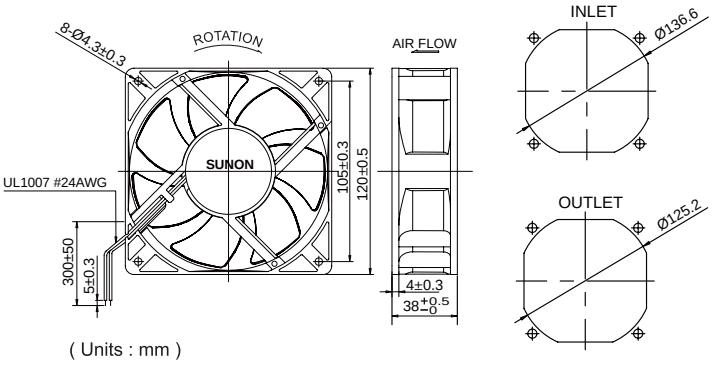

*All model could be customized. Please contact with Sunon Sales.
*Specifications subject to change without notice. Please Visit SUNON web site at http://www.sunon.com for update information.

120x120x38 mm

93~138 CFM

NEW

MAGLev by SUNON	Bearing ● VAPO	Rating Voltage (VDC)	Power Current (AMP)	Power Consumption (WATTS)	Speed (RPM)	Air Flow (CFM)	Static Pressure (Inch-H_2O)	Noise (dBA)	Weight (g)	Curve
MEC0381V1-0000-A99	●	12	0.845	10.1	3100	138	0.36	48	218	1
MEC0381V2-0000-A99	●	12	0.5	6.0	2600	116	0.26	44	218	2
MEC0381V3-0000-A99	●	12	0.27	3.2	2100	93	0.18	37	218	3
MEC0382V1-0000-A99	●	24	0.415	10.0	3100	138	0.36	48	218	1
MEC0382V2-0000-A99	●	24	0.23	5.5	2600	116	0.26	44	218	2
MEC0382V3-0000-A99	●	24	0.135	3.2	2100	93	0.18	37	218	3
MEC0384V1-0000-A99	●	48	0.245	11.8	3100	138	0.36	48	218	1
MEC0384V2-0000-A99	●	48	0.14	6.7	2600	116	0.26	44	218	2
MEC0384V3-0000-A99	●	48	0.075	3.6	2100	93	0.18	37	218	3

Model	◐ 2BALL ○ Sleeve	(VDC)	(AMP)	(WATTS)	(RPM)	(CFM)	(Inch-H_2O)	(dBA)	(g)	Curve
EEC0381B1-0000-A99	◐	12	0.8	9.6	3100	138	0.36	48	214	1
EEC0381B2-0000-A99	◐	12	0.48	5.8	2600	116	0.26	44	214	2
EEC0381B3-0000-A99	◐	12	0.255	3.1	2100	93	0.18	37	214	3
EEC0382B1-0000-A99	◐	24	0.4	9.6	3100	138	0.36	48	214	1
EEC0382B2-0000-A99	◐	24	0.215	5.2	2600	116	0.26	44	214	2
EEC0382B3-0000-A99	◐	24	0.13	3.1	2100	93	0.18	37	214	3
EEC0384B1-0000-A99	◐	48	0.215	10.3	3100	138	0.36	48	214	1
EEC0384B2-0000-A99	◐	48	0.125	6.0	2600	116	0.26	44	214	2
EEC0384B3-0000-A99	◐	48	0.07	3.4	2100	93	0.18	37	214	3

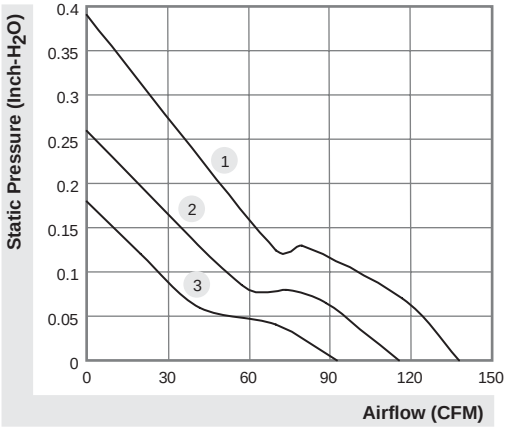

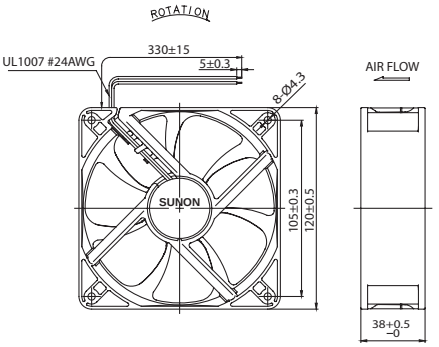

(Units : mm)

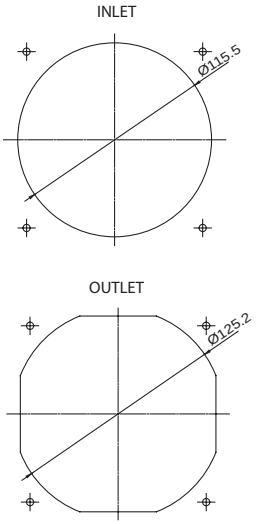

*All model could be customized. Please contact with Sunon Sales.
*Specifications subject to change without notice. Please Visit SUNON web site at http://www.sunon.com for update information.

35x35x7 mm

NEW

0.9 CFM

MAGLev by SUNON	P/N	Bearing ● VAPO	Rating Voltage (VDC)	Power Current (AMP)	Power Consumption (WATTS)	Speed (RPM)	Air Flow (CFM)	Static Pressure (Inch-H_2O)	Noise (dBA)	Weight (g)	Curve
GB1235PDV3-8	Z.X.GN	●	12	0.065	0.8	6300	0.9	0.27	22.2	8	1

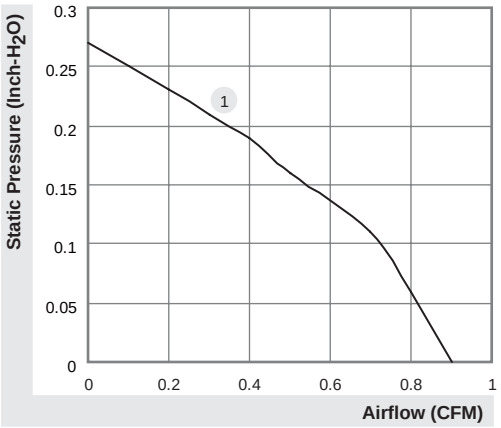

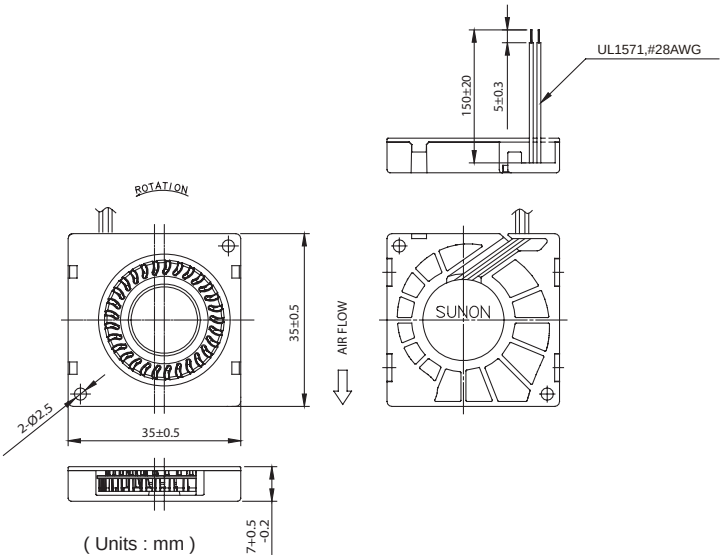

*All model could be customized. Please contact with Sunon Sales.
*Specifications subject to change without notice. Please Visit SUNON web site at http://www.sunon.com for update information.

45x45x20 mm

4.6 CFM

MAGLev by SUNON	P/N	Bearing ● VAPO	Rating Voltage (VDC)	Power Current (AMP)	Power Consumption (WATTS)	Speed (RPM)	Air Flow (CFM)	Static Pressure (Inch-H_2O)	Noise (dBA)	Weight (g)	Curve
GB1245PKV1-8AY	11.Z.X.GN	●	12	0.04	0.48	3500	4.6	0.22	21	22.64	1

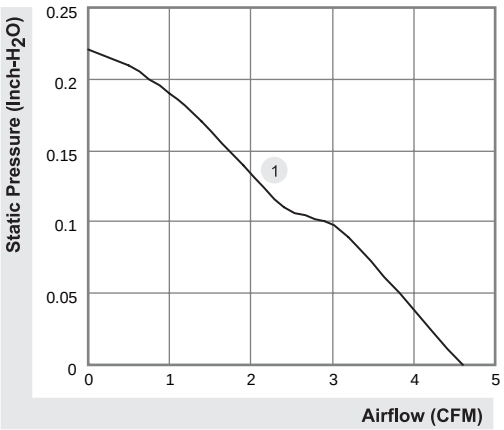

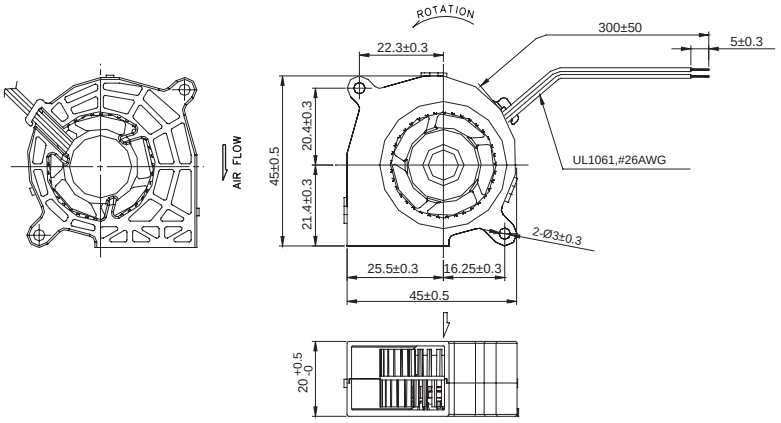

(Units : mm)

*All model could be customized. Please contact with Sunon Sales.
*Specifications subject to change without notice. Please Visit SUNON web site at http://www.sunon.com for update information.

50x50x15 mm

2.3~4.7 CFM

MAGLev by SUNON	P/N	Bearing ● VAPO	Rating Voltage (VDC)	Power Current (AMP)	Power Consumption (WATTS)	Speed (RPM)	Air Flow (CFM)	Static Pressure (Inch-H_2O)	Noise (dBA)	Weight (g)	Curve
GB1205PHVX-8AY	GN	●	12	0.17	2.0	6000	4.7	0.97	42.2	30	1
GB1205PHV1-8AY	GN	●	12	0.10	1.2	5000	4.0	0.67	39.8	30	2
GB1205PHV2-8AY	GN	●	12	0.06	0.7	4000	3.0	0.40	33.4	30	3
GB1205PHV3-8AY	GN	●	12	0.044	0.5	3000	2.3	0.16	27.0	30	4

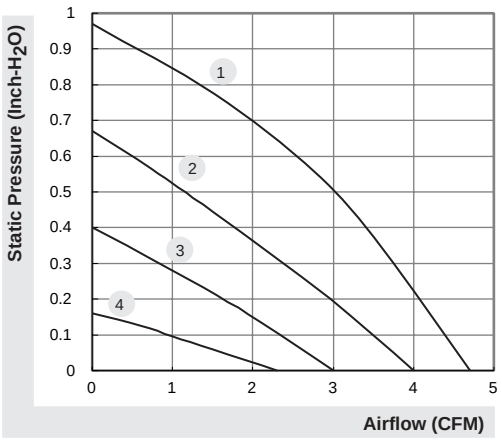

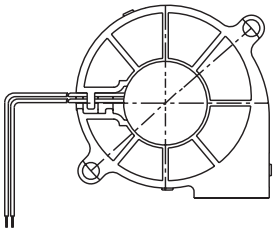

(Units : mm)

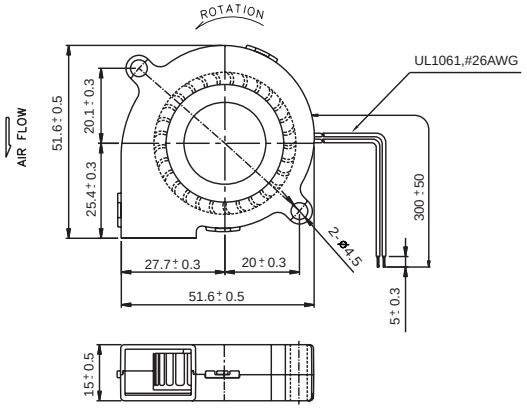

*All model could be customized. Please contact with Sunon Sales.
*Specifications subject to change without notice. Please Visit SUNON web site at http://www.sunon.com for update information.

50x50x20 mm

4.8~5.7 CFM

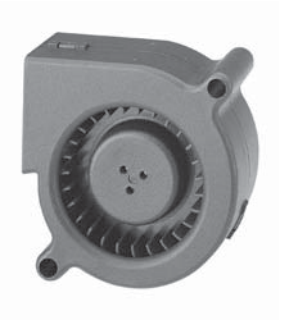

MAGLev by SUNON	P/N	Bearing ● VAPO	Rating Voltage (VDC)	Power Current (AMP)	Power Consumption (WATTS)	Speed (RPM)	Air Flow (CFM)	Static Pressure (Inch-H_2O)	Noise (dBA)	Weight (g)	Curve
GB1205PKV1-8AY	GN	●	12	0.124	1.5	5200	5.7	0.66	35	33	1
GB1205PKV2-8AY	GN	●	12	0.104	1.3	4800	5.2	0.56	33	33	2
GB1205PKV3-8AY	GN	●	12	0.088	1.1	4400	4.8	0.46	30	33	3

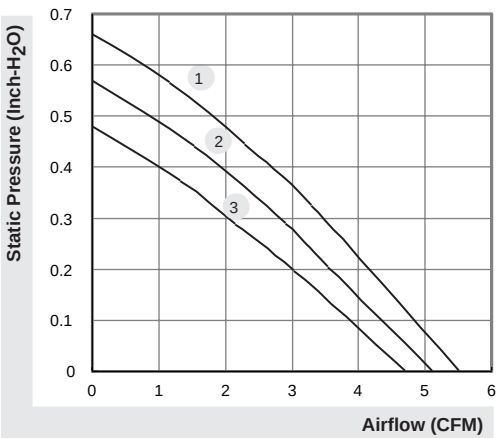

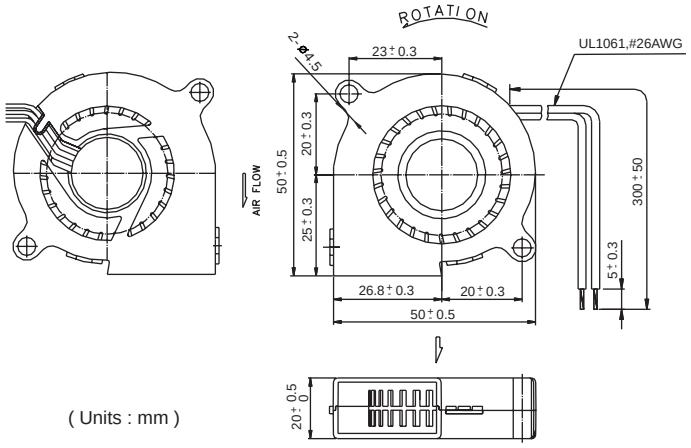

(Units : mm)

*All model could be customized. Please contact with Sunon Sales.
*Specifications subject to change without notice. Please Visit SUNON web site at http://www.sunon.com for update information.

60x60x15 mm

3.5~5.2 CFM

MAGLev by SUNON	P/N	Bearing ● VAPO	Rating Voltage (VDC)	Power Current (AMP)	Power Consumption (WATTS)	Speed (RPM)	Air Flow (CFM)	Static Pressure (Inch-H_2O)	Noise (dBA)	Weight (g)	Curve
GB1206PHV1-AY	GN	●	12	0.105	1.3	4800	5.2	0.44	40.5	45	1
GB1206PHV2-AY	GN	●	12	0.07	0.8	4200	4.7	0.32	36.0	45	2
GB1206PHV3-AY	GN	●	12	0.04	0.5	3200	3.5	0.18	29.0	45	3

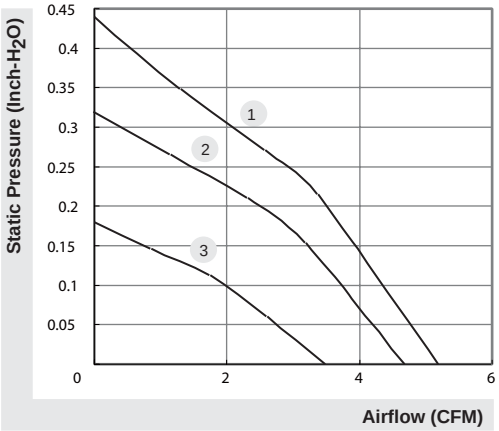

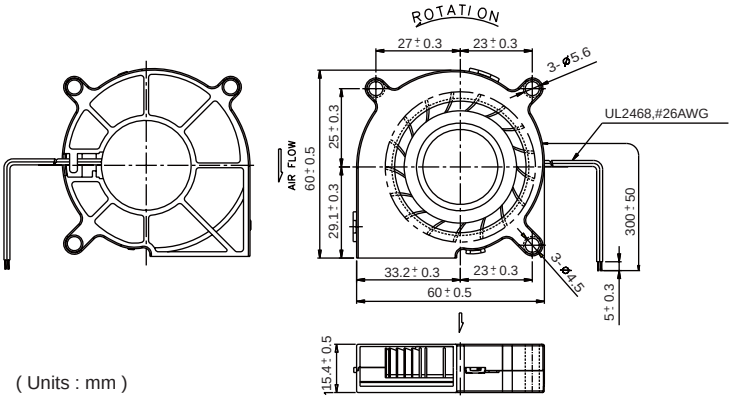

*All model could be customized. Please contact with Sunon Sales.
*Specifications subject to change without notice. Please Visit SUNON web site at http://www.sunon.com for update information.

60x60x25 mm

7.3 CFM

MAGLev by SUNON	P/N	Bearing ● VAPO	Rating Voltage (VDC)	Power Current (AMP)	Power Consumption (WATTS)	Speed (RPM)	Air Flow (CFM)	Static Pressure (Inch-H_2O)	Noise (dBA)	Weight (g)	Curve
GB1206PTV2-AY	13.Z.X.GN	●	12	0.14	1.7	3600	7.3	0.58	32.4	55	1

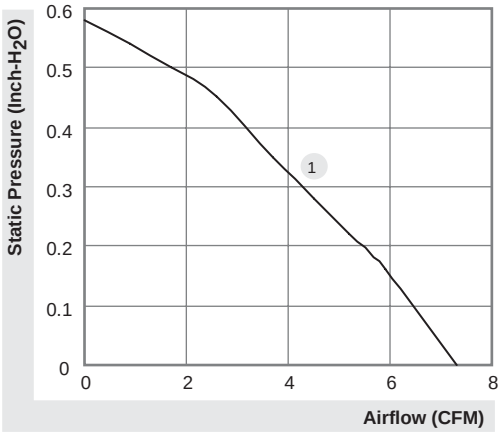

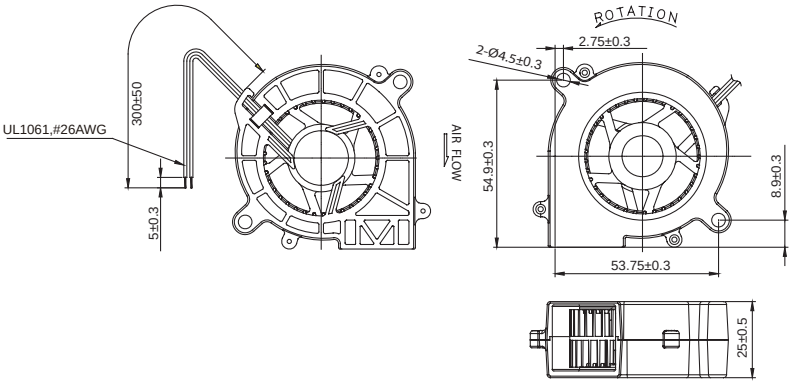

(Units : mm)

*All model could be customized. Please contact with Sunon Sales.
*Specifications subject to change without notice. Please Visit SUNON web site at http://www.sunon.com for update information.

75x75x30 mm

7.5~13.6 CFM

Model	P/N	Bearing ◉ 2BALL ○ Sleeve	Rating Voltage (VDC)	Power Current (AMP)	Power Consumption (WATTS)	Speed (RPM)	Air Flow (CFM)	Static Pressure (Inch-H_2O)	Noise (dBA)	Weight (g)	Curve
PMB1275PNB1-AY	(2).GN	◉	12	0.30	3.6	3400	13.6	0.60	43.5	86.5	1
PMB1275PNB2-AY	(2).GN	◉	12	0.23	2.8	3000	12.3	0.48	40.5	86.5	2
PMB1275PNB3-AY	(2).GN	◉	12	0.13	1.6	2400	9.6	0.27	33.9	86.5	3
PMB1275PNB4-AY	(2).GN	◉	12	0.08	1.0	1900	7.5	0.15	28.0	86.5	4
PMB2475PNB1-AY	(2).GN	◉	24	0.17	4.1	3400	13.6	0.60	43.5	86.5	1
PMB2475PNB2-AY	(2).GN	◉	24	0.14	3.4	3000	12.3	0.48	40.5	86.5	2
PMB2475PNB3-AY	(2).GN	◉	24	0.08	1.9	2400	9.6	0.27	33.9	86.5	3
PMB2475PNB4-AY	(2).GN	◉	24	0.05	1.2	1900	7.5	0.15	28.0	86.5	4

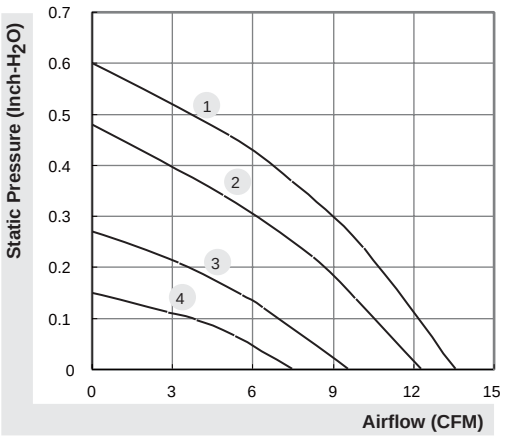

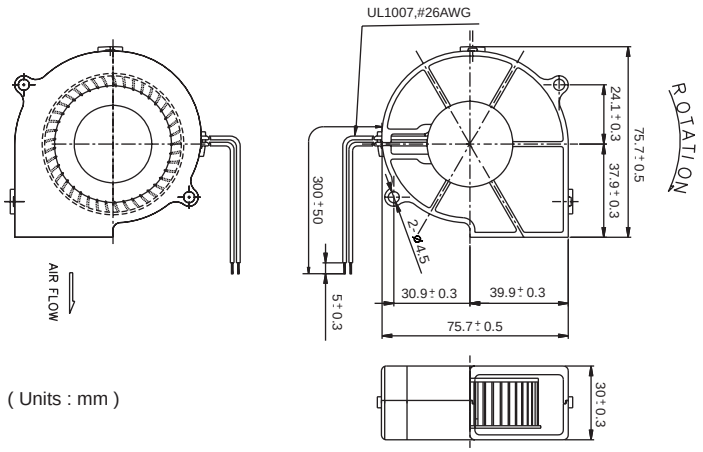

*All model could be customized. Please contact with Sunon Sales.
*Specifications subject to change without notice. Please Visit SUNON web site at http://www.sunon.com for update information.

97x94x33 mm

22.4~30.5 CFM

Model	P/N	Bearing ◉ 2BALL ○ Sleeve	Rating Voltage (VDC)	Power Current (AMP)	Power Consumption (WATTS)	Speed (RPM)	Air Flow (CFM)	Static Pressure (Inch-H_2O)	Noise (dBA)	Weight (g)	Curve
PMB1297PYB1-AY	(2).GN	◉	12	0.72	8.6	3600	30.5	0.92	55.8	185	1
PMB1297PYB2-AY	(2).GN	◉	12	0.56	6.7	3200	26.6	0.65	53.1	185	2
PMB1297PYB3-AY	(2).GN	◉	12	0.30	3.6	2700	22.4	0.43	50.0	185	3
PMB2497PYB1-AY	(2).GN	◉	24	0.39	9.4	3600	30.5	0.92	55.8	185	1
PMB2497PYB2-AY	(2).GN	◉	24	0.25	6.0	3200	26.6	0.65	53.1	185	2
PMB2497PYB3-AY	(2).GN	◉	24	0.16	3.8	2700	22.4	0.43	50.0	185	3
PMB4897PYB1-AY	(2).GN	◉	48	0.17	8.2	3600	30.5	0.92	55.8	185	1
PMB4897PYB2-AY	(2).GN	◉	48	0.13	6.2	3200	26.6	0.65	53.1	185	2
PMB4897PYB3-AY	(2).GN	◉	48	0.09	4.3	2700	22.4	0.43	50.0	185	3

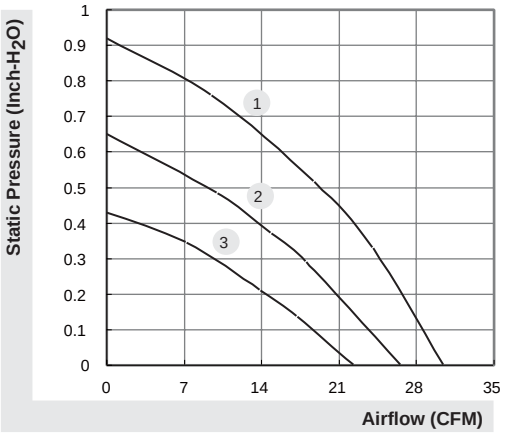

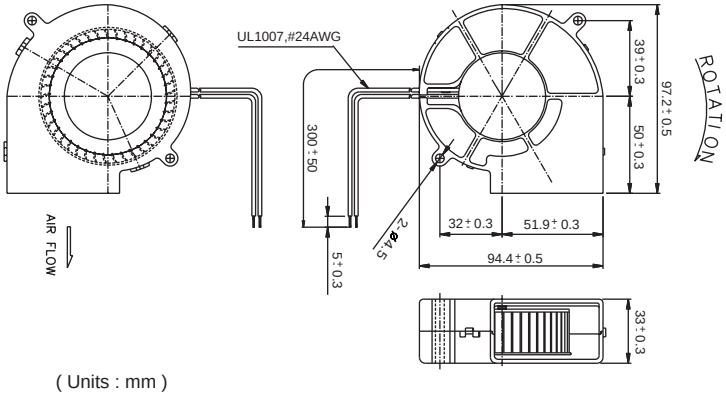

(Units : mm)

*All model could be customized. Please contact with Sunon Sales.
*Specifications subject to change without notice. Please Visit SUNON web site at http://www.sunon.com for update information.

120x120x32 mm

31.4~35.9 CFM

Model	P/N	Bearing ◉ 2BALL ○ Sleeve	Rating Voltage (VDC)	Power Current (AMP)	Power Consumption (WATTS)	Speed (RPM)	Air Flow (CFM)	Static Pressure (Inch-H_2O)	Noise (dBA)	Weight (g)	Curve
PMB1212PLB2-A	(2).GN	◉	12	0.82	9.8	2500	35.9	0.89	53.8	250	1
PMB1212PLB3-A	(2).GN	◉	12	0.45	5.4	2100	31.4	0.64	49.6	250	2
PMB2412PLB2-A	(2).GN	◉	24	0.38	9.1	2500	35.9	0.89	53.8	250	1
PMB2412PLB3-A	(2).GN	◉	24	0.24	5.8	2100	31.4	0.64	49.6	250	2
PMB4812PLB3-A	(2).GN	◉	48	0.12	5.8	2100	31.4	0.64	49.6	250	2

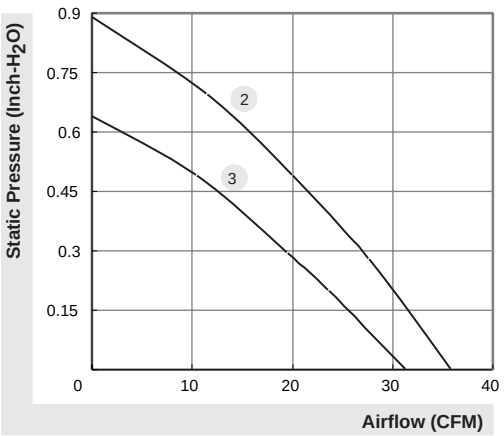

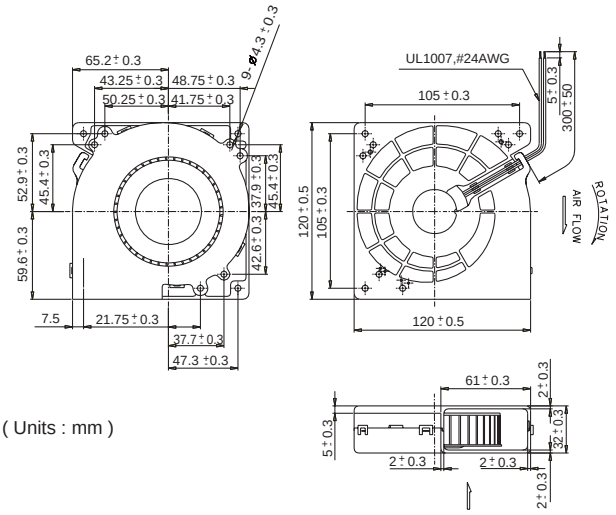

(Units : mm)

*All model could be customized. Please contact with Sunon Sales.
*Specifications subject to change without notice. Please Visit SUNON web site at http://www.sunon.com for update information.

Headquarters:

Sunonwealth Electric Machine Industry Co., Ltd.
No.30, Lane 296, Sinya Rd., Cianjhen District, Kaohsiung City 806, Taiwan
TEL : +886-7-8135888
FAX :+886-7-8230505/8230606/8231010
URL: http://www.sunon.com
E-mail: sunon@email.sunon.com.tw

Sunon Inc. (U.S.A.)
1075 West Lambert Road Suite A, Brea, California 92821, U.S.A
TEL : +1-714-255-0208
FAX :+ 1-714-255-0802
URL : http://www.sunonusa.com
E-mail : info@sunon.com

Sunon SAS (Europe)
Parc Medicis, 66, Ave Des Pepinieres 94832, Fresnes Cedex-France
TEL : +33-1-46154515
FAX : +33-1-46154510
URL: http://www.sunoneurope.com
E-mail : info@sunoneurope.com

Sunon Corporation (Japan)
Stork Minami Otsuka 4Fl.33-1, 2 Chome,
Minami Otsuka Toshimaku, Tokyo, Japan 170-0005
TEL : +81-3-5395-3069
FAX: +81-3-5395-3080
URL: http://www.sunon.co.jp
E-mail : info@sunon.co.jp

Sunonwealth Electric Machine Industry (HK) Ltd. (Hong Kong)
1210 Grand City Plaza, 1 Sai Lau Kok Road, Tsuen Wan, Hong Kong, China
TEL : + 852-24-111-388
FAX : + 852-24-050-707
E-mail : info@sunon.com.hk

Sunon Shanghai Office (Shanghai, China)
TEL : +86-021-54072207
FAX :+86-021-54072207 Ext:23
URL: http://www.sunon.com.cn

Sunon Shen Zhen Office (Shen Zhen, China)
TEL : +86-755-26880688
FAX :+86-755-26880288
E-mail : info@sunon.com.cn

Sunon Guangzhou Office (Guangzhou, China)
TEL : +86-20-87788928
FAX :+86-20-87786786

Sunon Taipei Office(Taipei)
5F., No.194, Jhouzih St., Neihu District, Taipei City 114, Taiwan
TEL: 02-27992383
FAX: 02-27972190

All rights reserved. SUNON is registered trademarks of SUNONWEALTH Electric Machine Industry Co., Ltd. ©2008 SUNONWEALTH Electric Machine Industry Co., Ltd.

2008/10/01(131-1)