samtec

TIGER EYE™ IDC

(1,27 mm) .050"

FFSD, FFMD SERIES

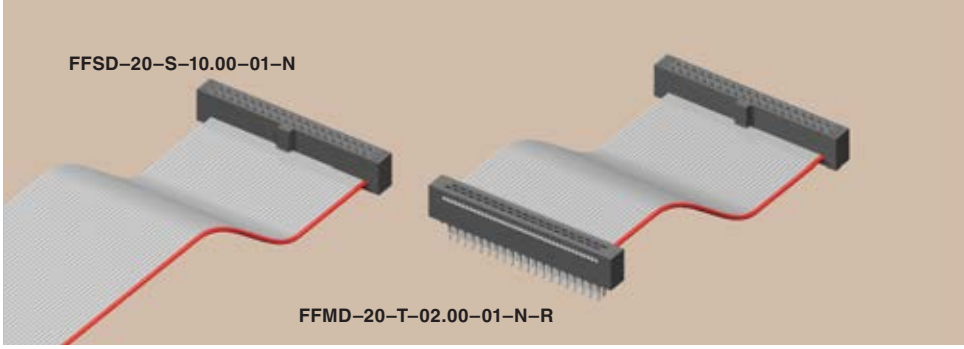

TIGER EYE™ FLAT IDC WIRE CABLES

SPECIFICATIONS

Mates with:
FTS, FTSH, EHF, SHF, ESHF

For complete specifications see www.samtec.com?FFSD

FFSD

Insulator Material: PBT
FILE NO. E111594
Contact: BeCu
Plating: 10µ" (0,25 µm) Au over 50µ" (1,27 µm) Ni on contact area; Sn over 50µ" (1,27 µm) Ni on balance
Wire: 30 AWG
Current Rating: 0.5A per contact
Operating Temp Range: -40°C to +105°C
Lead Size Accepted: (0,41 mm) .016" SQ
Contact Resistance: 15 mΩ
Insertion Depth: (2,64 mm) .104" to (3,17 mm) .125"
Insertion Force: (Single contact only) 5 oz (1,39 N) avg.
Withdrawal Force: (Single contact only) 3 oz (0,83 N) avg.
RoHS Compliant: Yes

Note: This Series is non-standard, non-returnable.

SPECIFICATIONS

Mates with:
FLE*, SFMC*,

Transfer End Option Mates with: FTS, FTSH, EHF, SHF, ESHF

For complete specifications see www.samtec.com?FFMD

FFMD

Insulator Material: Black Glass Filled Polyester
FILE NO. E111594
Terminal: Phosphor Bronze
Contact: BeCu (-T)
Plating: Sn over 50µ" (1,27 µm) Ni
Wire: 30 AWG
Current Rating: 0.5A/contact
Operating Temp Range: -40°C to +105°C
RoHS Compliant: Yes

***Note:** Standard FFMD callout will not mate with FLE, SFMC. Must use gold plated callouts. (See drawing on web.) When mated with a socket, Wire 1 mates with Pin 2; Wire 2 mates with Pin 1, etc.

Note: This Series is non-standard, non-returnable.

TYPE STRIP – NO. PINS PER ROW – END OPTION – OVERALL LENGTH – 01 – OPTION – OTHER OPTION

–05, –08, –10, –13, –17, –20, –25
(Call for other sizes)

–"XX.XX"
= Assembled Length

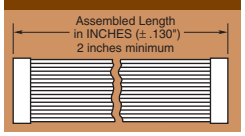

–N
= Notch Polarization (FFSD only)

–S = Single End

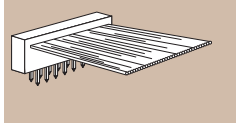

–D = Double End

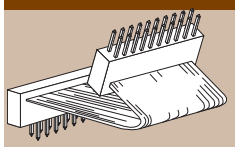

–T = Transfer End (FFMD only)

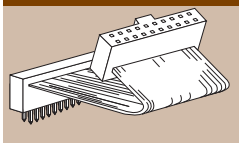

Leave blank for –S and –D End Options. For –T End Option Specify "–N" (Socket has notch polarization) (FFMD only)

–RW = Reverse Wiring

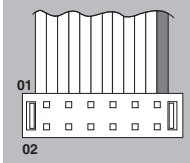

Blue or black wire opposite position #1.
1

–D "XX" = Daisy Chain

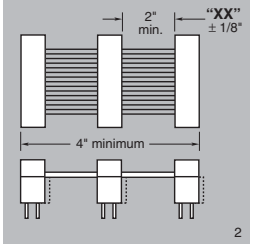

2

–R = Reverse

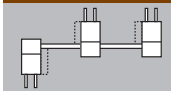

3

–M = Middle Reverse

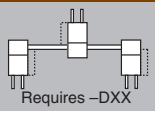

Requires –DXX 3

–O = Outside Reverse

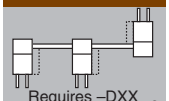

Requires –DXX 3

RUGGEDIZED by SAMTEC
• Strain relief option

–SR = Strain Relief

(Mates only with ESHF Series)

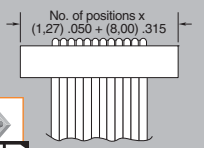

Not available with –O, –M, –R or –DXX

FFSD = Socket Strip

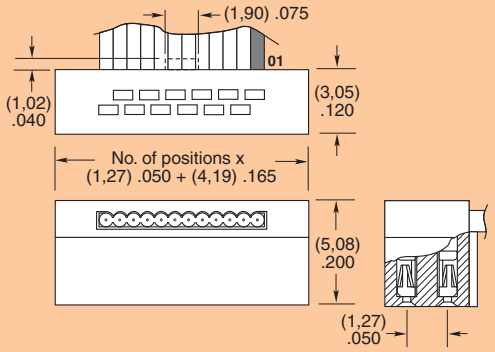

FFMD = Terminal Strip

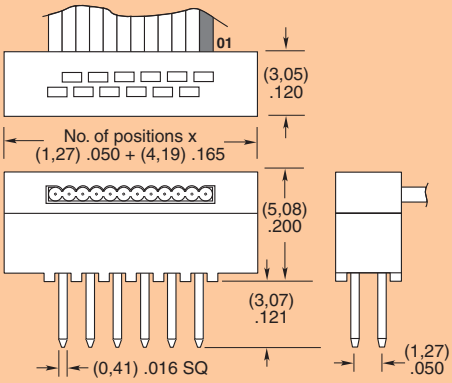

Due to technical progress, all designs, specifications and components are subject to change without notice.