THIS COPY IS PROVIDED ON A RESTRICTED BASIS AND IS NOT TO BE USED IN ANY WAY DETRIMENTAL TO THE INTERESTS OF PANDUIT CORP.

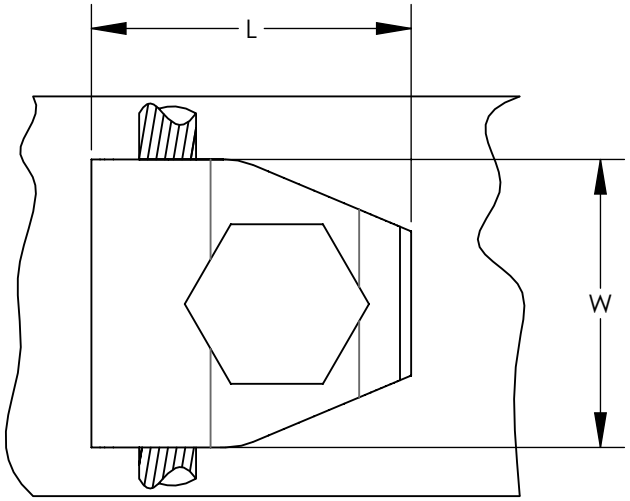


NOTES:

1. MADE FROM HIGH COPPER CONTENT ALLOY. FURNISHED WITH FULL THREADED SILICON BOLT, NUTS, AND LOCKWASHERS.
2. THESE CONNECTORS ARE UL LISTED FOR GROUNDING AND BONDING, AND DIRECT BURIAL APPLICATIONS.
3. SEE www.PANDUIT.com FOR PACKAGE QUANTITIES.

C UL US
467
LISTED
SUITABLE FOR
DIRECT BURIAL

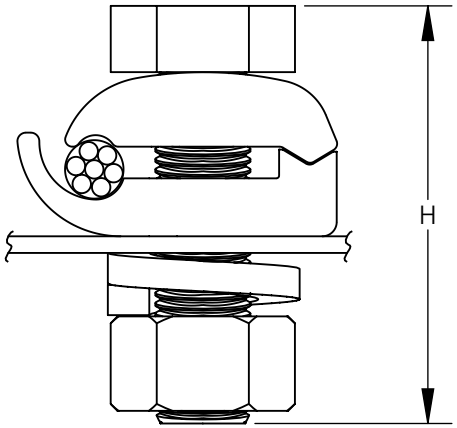


| PANDUIT PART NUMBER | FIGURE | CONDUCTOR RANGE | DIMENSIONS IN [mm] +/- .1 [2.5] | | | BOLT DIA. |
|---|---|---|---|---|---|---|
| | | | L | W | H | |
| GM-2-Q | 1 | 4 SOL - 2/0 STR | 1.63 [41.3] | 1.13 [28.6] | 1.75 [44.5] | 3/8" |
| GM-3-Q | 1 | 2/0 SOL - 250 kcmil | 1.88 [47.6] | 1.50 [38.1] | 2.00 [50.8] | 1/2" |

| REV | DATE | BY | CHK | APR | DESCRIPTION | ECN |
|---|---|---|---|---|---|---|
| 04 | 11/15 | JHNU | JHNU | RGB | REVISED WIRE RANGE FOR GMS-3-Q: 2/0 SOL WAS 2/0 STR | N41169BB-C41169 |

TITLE
BRONZE GROUND CLAMP
GM SERIES
CUSTOMER DRAWING

ITEM REVISION NAME: N41169BB/04

DATASET FILE NAME: N41169BB-C41169/04.SLDDRW

PANDUIT

UNLESS OTHERWISE SPECIFIED, DIMENSIONAL TOLERANCES ARE: IN [mm]
.X ± .XXX ±
.XX ± ANGLES ±

THIRD ANGLE PROJECTION

MATERIAL: SEE NOTES

DRAWING NUMBER: C41169

| DRAWN BY | DATE | CHK | SCALE | SHEET | SIZE |
|---|---|---|---|---|---|
| ED | 10/95 | WJB | N/A | SHEET 1 OF 1 | A |