THIS COPY IS PROVIDED ON A RESTRICTED BASIS AND IS NOT TO BE USED IN ANY WAY DETRIMENTAL TO THE INTERESTS OF PANDUIT CORP.

PANDUIT P/N	WEIGHT
TGSIC	1.46 LB (662.8 g)

NOTES:

1. SEE CURRENT CATALOG FOR ADDITIONAL PART SUFFIXES TO INDICATE COLOR AND OR PACKAGE QUANTITY.
2. THIS PRODUCT IS INTENDED TO OVERLAP BOTH TG COVERS.
3. DIMENSIONS IN PARENTHESIS ARE IN METRIC.

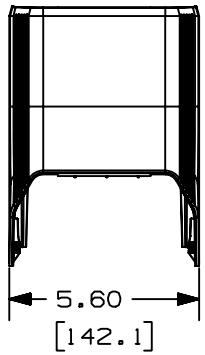

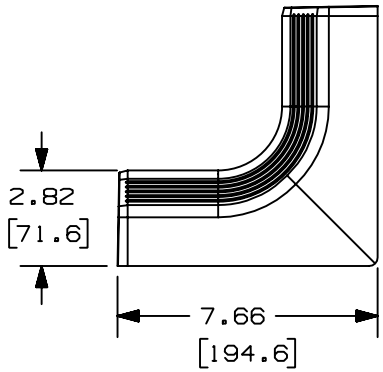

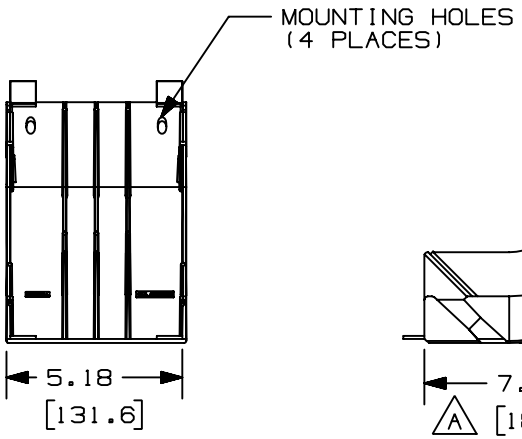

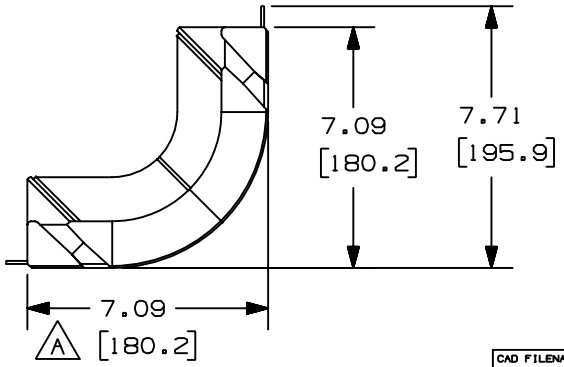

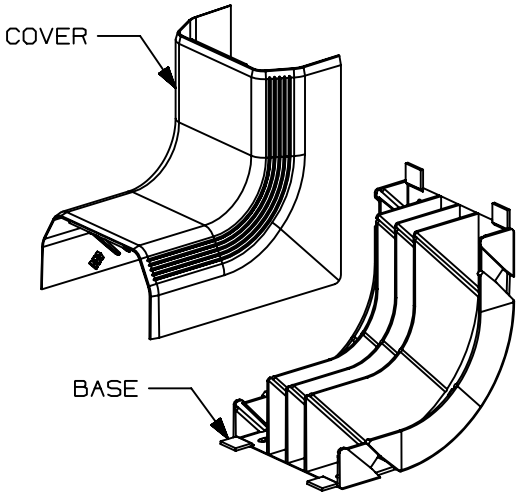

REV	DATE	BY	CHK	DESCRIPTION	ECN	CHK	CUST	SUP
2	04-02-04	JBN	PM	RELEASED TO PRODUCTION	38598-03	RGRO	RGRO	
1	10-30-03	JBN	PM	A. REVISED DIMENSION: 7.09 [180.2] WAS 6.95 [176.6]				
R	1-17-03	JHNU	PM	DRAWING RELEASED				

CAD FILENAME/LAYERS: D38598BC_DC_TGSIC_00C.PRT

PANDUIT CORP. TINLEY PARK, ILLINOIS

TG STANDARD INSIDE CORNER FITTING (TGSIC)
CUSTOMER DRAWING

UNLESS OTHERWISE SPECIFIED, DIMENSIONAL TOLERANCES ARE:
(.X) ± (.XXX) ±
(.XX) ±.03(.8) ANGLES ±

UNLESS OTHERWISE SPECIFIED, ALL DIMENSIONS ARE GIVEN IN INCHES, THIRD ANGLE PROJECTION.

DRAWN BY: JHNU
MAT'L: PVC
SCALE: NONE
DATE: 1-17-03
DRAWING NO.: 38598-03
DWG SIZE: A
CHECKED BY: PM