THIS COPY IS PROVIDED ON A RESTRICTED BASIS AND IS NOT TO BE USED IN ANY WAY DETRIMENTAL TO THE INTERESTS OF PANDUIT CORP.

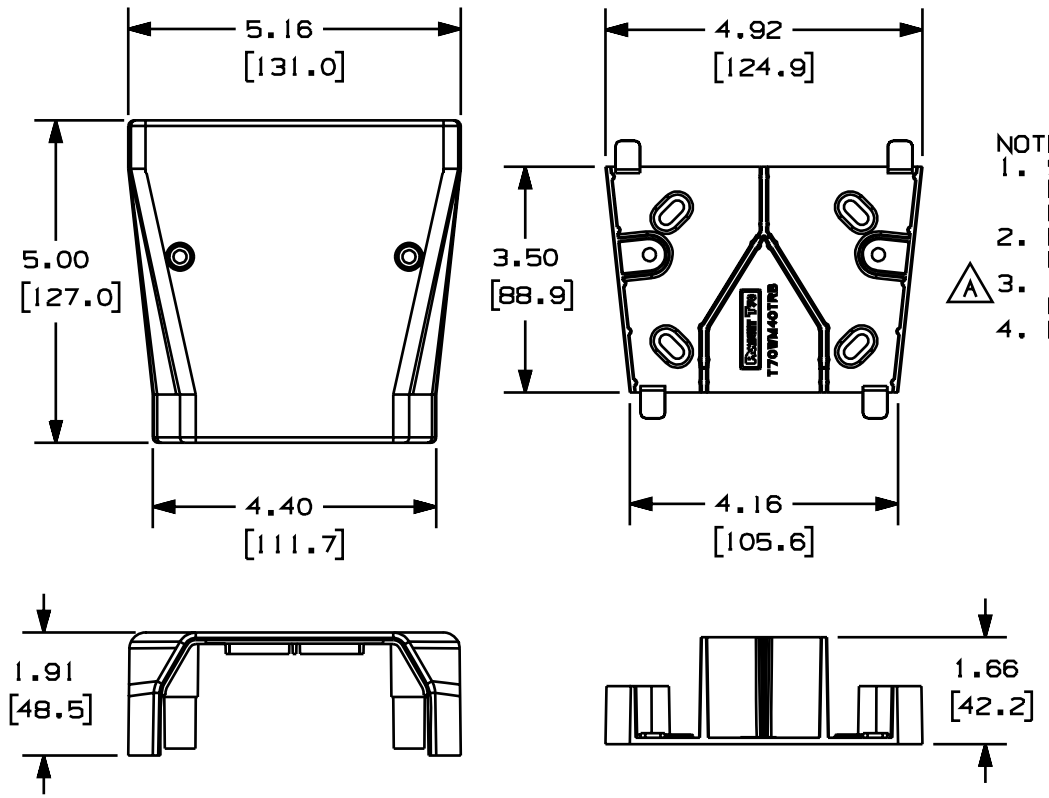

PANDUIT PART NO.	WEIGHT
T70WM40TR	.38 LBS/172.1 G

NOTES:
1. SEE CURRENT CATALOG FOR ADDITIONAL PART NUMBER SUFFIXES TO INDICATE COLOR AND/OR PACKAGE QUANTITY.
2. BREAKOUTS FOR MAINTAINING POWER AND DATA ENTRY SEPARATION.
3. (A) THIS PRODUCT INTENDED TO BE USED WITH PANDUIT TYPE T70 AND WIREMOLD® 4000 RACEWAY.
4. DIMENSIONS IN PARENTHESIS ARE IN METRIC.

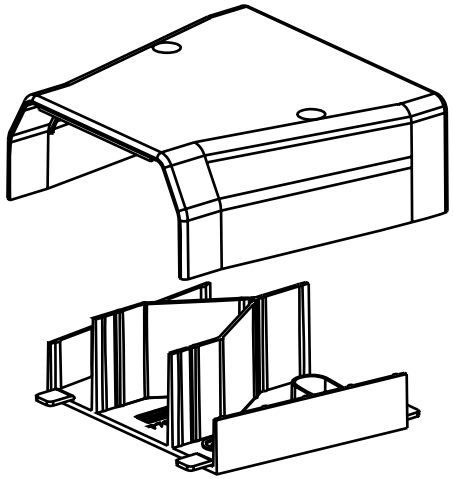

(A) WIREMOLD® IS A REGISTERED TRADEMARK OF THE WIREMOLD CO.

REV	DATE	BY	CHK	DESCRIPTION	ECN	CHK	CUST	SUP
1	06-04-02	JHEP	RMHI	B. CHANGED MATERIAL A. ADDED WIREMOLD CO. TRADEMARK TEXT	38286-04	RGRO	RGRO	
R	04-08-02	JBN	RMHI	RELEASED TO PRODUCTION	38286-04	RGRO	RGRO	

CAD FILENAME/LAYERS: D38286BD_DC_T70WM40TR_00B.PRT

PANDUIT CORP. TINLEY PARK, ILLINOIS

T70 TO WIREMOLD® 4000 TRANSITION FITTING (T70WM40TR)
CUSTOMER DRAWING

UNLESS OTHERWISE SPECIFIED, DIMENSIONAL TOLERANCES ARE:
(.X) ± .01 (.25) (.XXX) ± .005 (.13)
(.XX) ± .010 (.25) ANGLES ± 1°

UNLESS OTHERWISE SPECIFIED, ALL DIMENSIONS ARE GIVEN IN INCHES, THIRD ANGLE PROJECTION.

DRAWN BY: JBN
DATE: 04-08-02
CHK'D: RMHI
MAT'L: (B) PVC
SCALE: NONE
DRAWING NO.: 38286-04
DWG SIZE: A