Document Number S32V234
Rev. 3.1, 07/2017

S32V234

S32V234 Data Sheet

Features

- ARM® Cortex®-A53, 64-bit CPU
  - Up to 1000 MHz Quad ARM Cortex-A53
  - 32 KB/32 KB I-/D- L1 Cache
  - NEON MPE co-processor
  - Dual precision FPU
  - 2 clusters with 2 CPUs and 256 KB L2 cache each
  - Memory Management Unit
  - GIC Interrupt Controller
  - ECC/parity error support for its memories
  - Generic timers
  - Fault encapsulation by hardware for redundant executed application software on multiple core cluster
- ARM Cortex-M4, 32-bit CPU
  - Up to 133 MHz
  - 16 KB/16 KB I-/D- L1 Cache
  - 32+32 KB tightly coupled memory (TCM)
  - ECC/parity support for its memories
- Clocks
  - Phase Locked Loops (PLLs)
  - 1 external crystal oscillator (FXOSC)
  - 1 FIRC oscillator
- System protection and power management features
  - Flexible run modes to consume low power based on application needs
  - Peripheral clock enable register can disable clocks to unused modules, thereby reducing currents
  - Power gating of unused A53 cores and GPU
  - Low and high voltage warning and detect
  - Hardware CRC module to support fast cyclic redundancy checks (CRC)
  - 120-bit unique chip identifier
  - Hardware watchdog
  - eDMA controller with 32 channels (with DMAMUX)
  - Extended Resource Domain Controller
- Safety concept
  - ISO 26262, ASIL level target
  - Measures to detect faults in memory and logic
  - Measures to detect single point and latent faults
  - Quantitative out of context analysis of functional safety (FMEDA) tailored to application specifics
  - Safety manual and FMEDA report available
- Security
  - CSE with 16 KB of on-chip Secure RAM and ROM.
  - ARM TrustZone (TZ) architecture support
  - Boot from NOR flash with AES-128 (CTR)
  - On-Chip One-Time Programmable element Controller (OCOTP_CTRL) with on chip electrical fuse array.
  - System JTAG Controller (SJC)
- Debug functionality
  - Standard JTAG and Compact JTAG
  - 16-bit Trace port, Serial Wire Output port
- Timers
  - General purpose timers (FTM)
  - Two Periodic Interrupt Timer (PIT)
  - IEEE 1588 Timers (part of Ethernet Subsystem)
- Analog
  - 1x 12-bit 1.8 V SAR ADC with self-test
- Communications
  - UART(w/ LIN2.1l)
  - Serial peripheral interface (SPI)
  - I2C blocks
  - PCI express 2.0 with endpoint and root complex support
  - LFAST serial link
  - 1 GBit Ethernet with PTP IEEE 1588
  - FD-CAN
  - FlexRay Dual Channel, Version 2.1 RevA

This document contains information on a product under development. NXP reserves the right to change or discontinue this product without notice.

Downloaded from Arrow.com.

- Memory interfaces
  - 32-bit DRAM Controller with support for LPDDR2/DDR3/DDR3L - Up to 1066 MHz data rate with ECC (SEC-DED-TED) triple errror detection support for subregion
  - QuadSPI supporting Execute-In-Place (XIP)
  - Boot flash fault detection and correction using two-dimensional parity.
  - Triple fault detection and single fault correction scheme for external DDR-RAM including address/page fault detection.
- Video input interfaces, Image processing, graphics processing, display
  - Display Control Unit (2D-ACE) with 24-bit RGB, GPU frame buffer decoding
  - GPU GC3000 with frame buffer compression
  - 2x VIU (Video interface unit) for camera input
  - 2x MIPICSI2 with four lanes for camera input (support 1080 pixel @ 30 fps)
  - Image signal processor (ISP), supporting 2x1 or 1x2 megapixel @ 30 fps and 4x2 megapixel for subset of functions (exposure control, gamma correction)
  - 2x APEX2-CL Image cognition processor supporting OpenCL 1.2. APEX-642CL comprises two Array Processing Unit (APU) cores configurable as single SIMD engine with 64 16-bit Computational Units (CU), or configurable as two core MIMD engines with 32 16-bit CUs each.
  - CUs are comprised of four Functional Units: 16-bit Multiplier, Load Store Unit, ALU, and Shifter
  - JPEG video decoder (8/12-bit)
  - H.264 video decoder (8/10/12-bit), High-intra and constrained baseline formats
  - H.264 video encode (8/10/12-bit), High-intra only
  - Fast DMA for data transfers between DRAM and System RAM with CRC
- Human-Machine Interface (HMI)
  - GPIO pins with interrupt support, DMA request capability, digital glitch filter
  - Configurable slew rate and drive strength on all output pins
- System RAM
  - 4 MB On-Chip System RAM with ECC

Downloaded from Arrow.com.

Table of Contents

1 Block diagram.....5
2 Family comparison.....5
2.1 Feature Set.....5
3 Ordering parts.....8
3.1 Ordering information.....8
4 General.....8
4.1 Operation above maximum operating conditions.....8
4.2 Recommended operating conditions.....9
4.3 Power Management Controller (PMC) electrical specifications.....10
4.4 Power consumption.....11
4.5 Electrostatic discharge (ESD) specifications.....12
4.6 Electromagnetic Compatibility (EMC) specifications.....13
4.7 PCB routing guidelines.....13
5 I/O parameters.....14
5.1 General purpose I/O parameters.....14
5.1.1 GPIO speed at various voltage levels.....14
5.1.2 DC electrical specifications.....16
5.2 DDR pads.....16
5.2.1 Boot Configuration Pins Specification.....16
5.2.2 DDR3 mode.....17
5.2.2.1 DDR3 mode DC electrical specifications.....17
5.2.3 DDR3L mode.....17
5.2.3.1 DDR3L mode DC electrical specifications.....17
5.2.4 LPDDR2 mode.....18
5.2.4.1 LPDDR2 mode DC electrical specifications.....18
6 Peripheral operating requirements and behaviors.....19
6.1 Analog modules.....19
6.1.1 ADC electrical specifications.....19
6.1.1.1 Input equivalent circuit.....19
6.1.2 Thermal Monitoring Unit (TMU).....21
6.2 Clocks and PLL interfaces modules.....21
6.2.1 Main oscillator electrical characteristics.....21
6.2.2 48 MHz FIRC electrical characteristics.....22
6.2.3 PLL electrical specifications.....22
6.2.4 DFS electrical specifications.....23
6.2.5 LFAST PLL Electrical Specifications.....23
6.3 Memory interfaces.....24
6.3.1 QuadSPI AC specifications.....24
6.4 DDR SDRAM Specific Parameters (DDR3, DDR3L, and LPDDR2).....29
6.4.1 DDR3 and DDR3L timing parameters.....29
6.4.2 DDR3 and DDR3L read cycle.....31
6.4.3 DDR3 and DDR3L write cycle.....32
6.4.4 LPDDR2 timing parameter.....33
6.4.5 LPDDR2 read cycle.....35
6.4.6 LPDDR2 write cycle.....35
6.5 Communication modules.....37
6.5.1 DSPI timing.....37
6.5.2 Ultra High Speed SD/SDIO/MMC Host Interface (uSDHC) AC timing.....41
6.5.2.1 SDR mode timing specifications.....41
6.5.2.2 DDR mode timing specifications.....42
6.5.3 LFAST electrical characteristics.....45
6.5.3.1 LFAST interface timing diagrams.....45
6.5.3.2 LFAST Interface electrical characteristics.....46
6.5.4 FlexRay.....47
6.5.4.1 FlexRay timing parameters.....47
6.5.4.2 TxEN.....47
6.5.4.3 TxD.....48
6.5.4.4 RxD.....49
6.5.5 Ethernet Controller (ENET) Parameters.....50
6.5.5.1 Ethernet Switching Specifications.....50
6.5.5.2 Receive and Transmit signal timing specifications for RMII interfaces.....50
6.5.5.3 Receive and Transmit signal timing specifications for MII interfaces.....51
6.5.5.4 Receive and Transmit signal timing specifications for RGMII interfaces.....52
6.5.5.5 MII/RMII Serial Management channel timing (MDC/MDIO).....53
6.5.6 PCI Express specifications.....54
6.5.7 IIC timing.....55
6.5.8 LINFlex timing.....57
6.6 Display modules.....57
6.6.1 Display Control Unit (2D-ACE) Parameters.....57

Downloaded from Arrow.com.

6.6.1.1 Interface to TFT panels.....57
6.6.1.2 Interface to TFT LCD Panels—Pixel Level Timings.....58
6.6.1.3 Interface to TFT LCD panels—access level.....59
6.6.2 Video input unit (VIU) timing specifications.....60
6.6.3 MIPICSI2 D-PHY electrical and timing parameters.61
6.6.3.6 NOTICE OF DISCLAIMER.....64
6.7 Debug specifications.....65
6.7.1 JTAG interface timing.....65
6.7.2 Debug trace timing specifications.....69
6.8 Wakeup Unit (WKPU) AC specifications.....70
6.9 RESET pin glitch filter specifications.....70
6.10 External interrupt timing (IRQ pin).....70
7 Thermal attributes.....71
7.1 Thermal attributes.....71
8 Dimensions.....71
8.1 Obtaining package dimensions 71
9 Pinouts.....72
9.1 Package pinouts and signal descriptions.....72
10 Reset sequence.....72
10.1 Reset sequence duration.....72
10.2 Boot performance matrix.....72
10.3 Reset sequence description.....73
11 Power sequencing requirements.....76
12 Revision history.....77

Downloaded from Arrow.com.

1 Block diagram

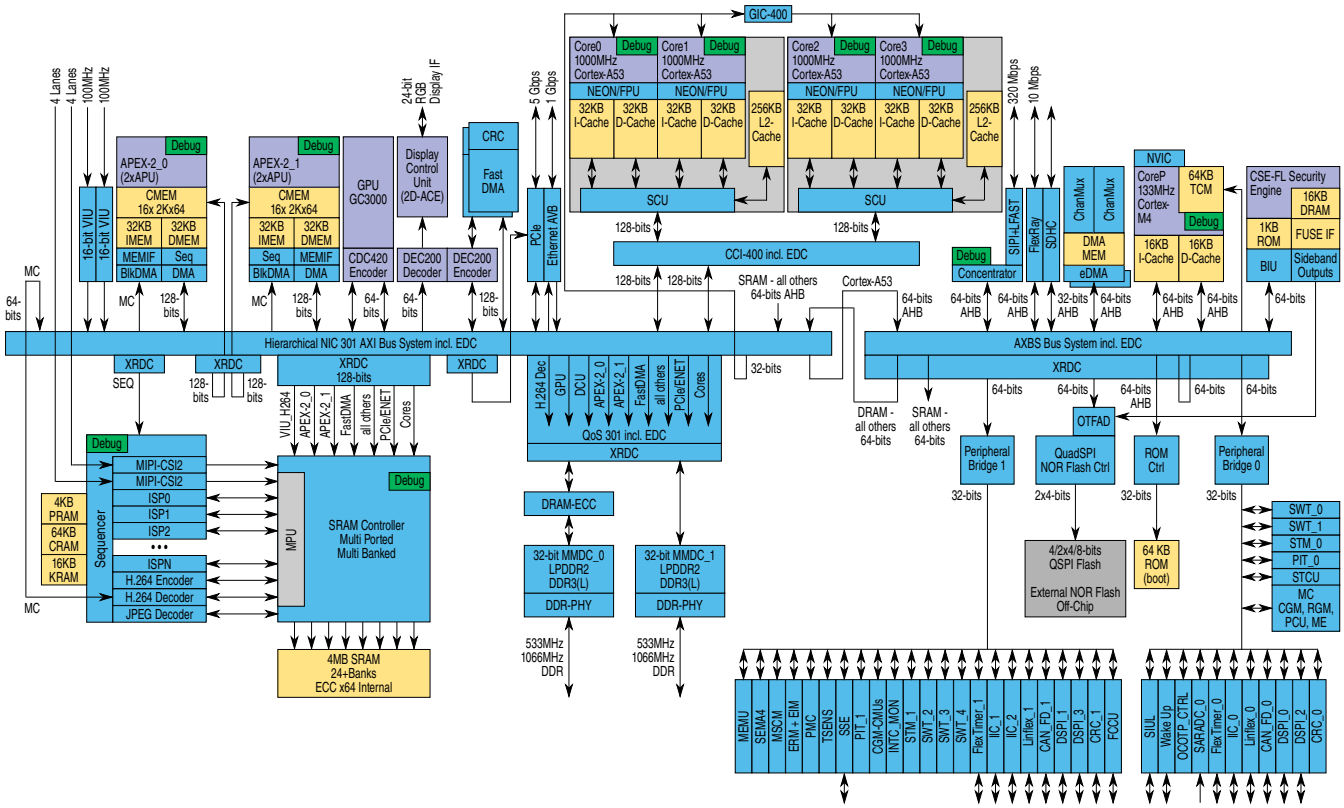

Figure 1. Block diagram

2 Family comparison

2.1 Feature Set

This family of devices supports the following features:

Table 1. Feature Set

Feature	S32V234	S32V232
ARM Cortex-A53 Core	• Up to 1000 MHz Quad ARM Cortex-A53 • 32 KB/32 KB I-/D- L1 Cache • NEON MPE co-processor • Dual precision FPU • 256 KB L2 Cache per cluster • MMU • GIC interrupt controller	• Up to 800 MHz Dual ARM Cortex-A53 (single cluster) • Rest all features same as S32V234

Table continues on the next page...

Downloaded from Arrow.com.

Table 1. Feature Set (continued)

Feature	S32V234	S32V232
	• ECC/parity error support for its memories • Generic timers	
ARM Cortex-M4 Core	• Up to 133 MHz • 16 KB/16 KB I-/D- L1 Cache • 32+32 KB tightly coupled memory (TCM) • ECC/parity support for its memories	• Same as S32V234
Clocks	• Phase Locked Loops (PLLs) • 1 external crystal ocillators (FXOSC) • 1 FIRC	• Same as S32V234
System, protection and power management features	• Flexible run modes to consume lower power based on application needs. • Peripheral clock enable registers can disable clocks to unused modules, thereby reducing currents • Low and high voltage warning and detect • Hardware CRC module to support fast cyclic redundancy checks (CRC) • 120-bit unique chip identifier • Hardware watchdog • Safe eDMA controller with 32 channels (with DMAMUX) • Extended Resource Domain Controller	• Same as S32V234
Safety concept	• ISO 26262, ASIL level target as per safety concept • Measures detecting faults in memory and logic • Measures to detect single point and latent faults • Quantitative out of context analysis of functional safety (FMEDA) tailored to application specifics • Safety manual and FMEDA report available • Boot flash authentication and fault detection and correction using AES-128 and two-dimensional parity. • Double and triple fault detection and single fault correction scheme for external DDR-RAM including address/ page fault detection. • Fault encapsulation by hardware for redundant executed application software on multiple core cluster. • Structural software based self test routines providing high diagnostic coverage.	• Same as S32V234
Debug	• Standard JTAG • 16-bit Trace port, Serial Wire Output port	• Same as S32V234
Timers	• General purpose timers (FTM)	• Same as S32V234

Table continues on the next page...

Downloaded from Arrow.com.

Table 1. Feature Set (continued)

Feature	S32V234	S32V232
	• Two Periodic Interrupt Timer (PIT) • IEEE 1588 Timers (part of Ethernet Subsystem)	
Communications	• UART(w/ LIN2.1l) • Serial peripheral interface (SPI) • I2C blocks • PCI express 2.0 with endpoint and root complex support • LFAST serial link • 1 GBit Ethernet with PTP IEEE 1588 • FD-CAN • Flexray Dual Channel, Version 2.1 RevA	• UART(w/ LIN2.1l) • Serial peripheral interface (SPI) • I2C blocks • LFAST serial link • 1 GBit Ethernet with PTP IEEE 1588 • FD-CAN • Flexray Dual Channel, Version 2.1 RevA
Memory Interfaces	• 32-bit DRAM Controller with support for LPDDR2/DDR3/DDR3L - Up to 1066 MHz data rate with ECC (SEC-DED-TED) single error correction, double error detection, and triple error detection support for subregion • Dual QuadSPI supporting Execute-In-Place (XIP)	• Same as S32V234
Video input interfaces, Image processing, graphics processing, display	• Display Control Unit (2D-ACE) with 24-bit RGB, GPU framebuffer decoding • GPU GC3000 with frame buffer compression • 2x Video interface unit (VIU) for camera input • 2x CSI with 4 lanes for camera input (support 1080p @ 30fps) • Image signal processor (ISP), supporting 2x1 or 1x2 MPixel @ 30fps and 4x1 MPixel for subset of functions (exposure control, gamma correction) • 2x APEX2-CL Image cognition processor (dual 32-bit array processor) • JPEG video decoder (8/12-bit) • H.264 video decoder (8/10/12-bit), High-intra and constrained baseline formats • H.264 video encoder (8/10/12-bit), I-frames only • Safe Fast DMA for data transfers between DRAM and System RAM with CRC	• Same as S32V234
Analog	• 1x 12-bit SAR ADC with self-test	• Same as S32V234
Human-Machine Interface (HMI)	• SIUL, GPIO pins with interrupt support, DMA request capability, digital glitch filter. • Configurable slew rate and drive strength on all output pins	• Same as S32V234
System RAM	• 4 MB On-Chip System RAM with ECC	• 3 MB On-Chip System RAM with ECC
Power Consumption	• Run modes:	• Same as S32V234

Downloaded from Arrow.com.

Table 1. Feature Set

Feature	S32V234	S32V232
	• Frequency scaling and clock gating for processing blocks and peripherals in run mode	

3 Ordering parts

3.1 Ordering information

The orderable part number is PS32V234CMN0AVUB. This is the pre-production part number and production part numbers will be available from NXP sales representative.

4 General

4.1 Operation above maximum operating conditions

Table 2. Operation above maximum operating conditions

1.8 V DGO Voltage Domain			
Electrical Specifications	Value	Conditions	Junct Temp
Absolute Maximum Supply Voltage	3.0 V	< 60 s	25 °C
Absolute Maximum Supply Voltage	2.3 V	< 10 hr	25 °C
Operating Max Supply Voltage	1.98 V	—	—
Core Voltage Domain			
Electrical Specifications	Value	Conditions	Junct Temp
Absolute Maximum Supply Voltage	1.29 V	< 60 s	25 °C
Absolute Maximum Supply Voltage	1.1 V	< 10 hr	25 °C
Operating Max Supply Voltage	1.05 V	—	—
3.3 V DGO Voltage Domain			
Electrical Specifications	Value	Conditions	Junct Temp
Absolute Maximum Supply Voltage	4.95 V	< 60 s	25 °C

Table continues on the next page...

Downloaded from Arrow.com.

Table 2. Operation above maximum operating conditions (continued)

Absolute Maximum Supply Voltage	4.29 V	< 10 hr	25 °C
Operating Max Supply Voltage	1.05 V	—	—

4.2 Recommended operating conditions

Table 3. Recommended operating conditions

Symbol	Parameter	Conditions	Min	Max	Unit
V_{DD_GPIO0}	3.3 V I/O segment GPIO0 supply voltage	—	3.15	3.6	V
$V_{DD_GPIO<n=1,2>}$ $V_{DD_HV_IO_VIU0}$ $V_{DD_HV_IO_VIU1}$ $V_{DD_HV_IO_DIS}$ $V_{DD_HV_IO_FLA}$	3.3 V input/output supply voltage (for multi voltage I/O segments	—	1.71	3.6	V
$V_{DD_HV_IO_ETH}$	3.3 V input/output supply voltage (for multi voltage I/O segments	—	1.5	3.6	V
V_{SS}	Common ground voltage[1]	—	0	0	V
$V_{DD_LV_CORE_SOC}$, $V_{DD_LV_CORE_ARM}$, $V_{DD_LV_CORE_GPU}$	1.0 V core domain supply voltage[2]	—	0.95	1.05	V
$V_{DD_HV_CSI}$	1.8 V supply voltage (for MIPICSI2 D PHY)	—	1.71	1.95	V
$V_{DD_LV_CSI}$	1.0 V supply voltage (for MIPICSI2 D PHY)	—	0.95	1.05	V
$V_{DD_HV_PLL}$, $V_{DD_HV_LFASTPLL}$, $V_{DD_HV_FXOSC}$, $V_{DD_HV_PMC}$, V_{DDIO_LFAST}, $V_{DD_HV_EFUSE}$, $V_{DD_HV_DDR}$	1.8 V supply voltage (for analog circuits, PLLs)	—	1.71	1.95	V
$V_{DD_LV_PLL}$ $V_{DD_LV_POST}$	1.0 V supply voltage (for analog circuits, PLLs)	—	0.95	1.05	V
V_{REFH_ADC}	1.8 V ADC high reference voltage	—	1.71	1.95	V
$V_{DD_HV_ADV}$	1.8 V ADC supply voltage	—	1.71	1.95	V
$V_{SS_HV_ADV}$	ADC ground and low reference voltage	—	0	0	V
V_{REFL_ADC}	1.8 V ADC supply ground	—	0	0	V
$V_{DD_DDR_IO}$	DDR I/O supply voltage LPDDR2	—	1.14	1.30	V
	DDR I/O supply voltage DDR3	—	1.425	1.575	V
	DDR I/O supply voltage DDR3L	—	1.283	1.45	V

Table continues on the next page...

Downloaded from Arrow.com.

Table 3. Recommended operating conditions (continued)

Symbol	Parameter	Conditions	Min	Max	Unit
P_{CIE_VP}	PCIe supply voltages	—	0.95	1.05	V
P_{CIE_VPH}		—	1.71	1.95	V
T_A	Ambient temperature	—	-40	105[3]	°C
T_J	Junction temperature under bias	—	-40	125	°C
TV_{DD}	Supply ramp rate for all supplies on the device	—	0.05	25	V/ms

1. All the grounds viz. V_{SS}, V_{SS_XOSC}, and $V_{SS_HV_ADV}$ are tied together at the package level.
2. $V_{DD_LV_CORE_SOC}$, $V_{DD_LV_CORE_ARM}$, and $V_{DD_LV_CORE_GPU}$ supply balls should all be connected together to one power plane and one regulator to avoid voltage level differences. If the GPU is power gated as it is not used, the $V_{DD_LV_CORE_GPU}$ supply balls have to be statically connected to the ground plane. If the second ARM CPUs per cluster is power gated as they are not used, the $V_{DD_LV_CORE_ARM}$ supply balls have to be statically connected to the ground plane.
3. Maximum ambient temperature requires management of the heat dissipation to ensure the device junction temperature does not exceed the maximum.

4.3 Power Management Controller (PMC) electrical specifications

PMC is composed of the following blocks:

- Low voltage detector (LVD_33_PMC) for 3.3 V VDD_GPIO0 supply (GPIO segment and PMC) and Low Voltage Detector for FIRC (VDD_HV_OSC)
- Low voltage detector (LVD_18) for VDD_HV_PMC
- Low voltage detector (LVD_18) for VDD_HV_FXOSC
- High voltage detector (HVD_18) for VDD_HV_PMC
- Low voltage detector (LVD_CORE) for VDD_LV_CORE_SOC
- High voltage detector (HVD_CORE) for VDD_LV_CORE_SOC
- Power on Reset (POR)

Table 4. PMC electrical specifications

Supply	Parameter	Conditions	Threshold	Min	Typical	Max	Status during power-up	Unit
VDD_LV_CORE_SOC	low voltage monitoring	Native	VTL[1]	836	880	924	Enabled	mV
			VTH[2]	850	895	940		
		Trimmed	VTL	896	910	924		
			VTH	911	925	946		
VDD_LV_CORE_SOC	high voltage monitoring	Trimmed	VTL	1049	1065	1093	Disabled	mV
			VTH	1064	1080	1093		
VDD_HV_PMC	PMC supply low voltage monitor	Native	VTL	1511	1590	1670	Enabled	mV
			VTH	1525	1605	1685		
		Trimmed	VTL	1620	1650	1680		
			VTH	1635	1665	1695		

Table continues on the next page...

Downloaded from Arrow.com.

Table 4. PMC electrical specifications (continued)

Supply	Parameter	Conditions	Threshold	Min	Typical	Max	Status during power-up	Unit
VDD_HV_PMC	PMC supply high voltage monitor	Trimmed	VTL	2004	2045	2086	Disabled	mV
			VTH	2019	2060	2101		
VDD_GPIO0	low voltage monitor	Native	VTL	2727	2870	3014	Enabled	mV
			VTH	2746	2890	3035		
		Trimmed	VTL	2857	2915	2973		
			VTH	2876	2935	2994		
VDD_HV_OSC	OSC supply low voltage monitor	Native	VTL	1511	1590	1670	Enabled	mV
			VTH	1525	1605	1685		
		Trimmed	VTL	1620	1650	1680		
			VTH	1635	1665	1695		
PMC_BGREF	PMC Band Gap Reference value	Trimmed	–	1176	1200	1224	Enabled	mV

1. Lower threshold/assert point
2. Upper threshold/release point

4.4 Power consumption

The following table shows the power consumption data. These specifications are subject to change per device characterization.

Table 5. Power consumption

Parameter	Description	Max Values[1, 2]
VDD_LV_CORE[2]	S32V234 Device in reset 'front view/low power part' @ 125 °C	3.6 A
	S32V232 Device in reset 'low power part' w/o GPU and w/o A53 CPU3 and CPU4 @ 125 °C	3.3 A
	S32V234 Device in reset 'high speed part' with GPU @ 125 °C	7.4 A
	S32V234 Device in reset 'high speed part' without GPU @ 125 °C	5.8 A
	Adder 4x A53 CPU with Dhrystone MIPS running on each CPU @1 GHz [3]	1.4 A
VDD_HV_CSI	Current for both MIPICSI2 interfaces operating as per	1) 10 mA 2) 1 mA

Table continues on the next page...

Downloaded from Arrow.com.

Table 5. Power consumption (continued)

Parameter	Description	Max Values[1, 2]
	1) RX Operation at 1.5 Gbps per MIPICSI2 2) MIPICSI2 not used (not powered?)	
VDD_LV_CSI	Current for both MIPICSI2 interfaces operating as per 1) RX Operation at 1.5 Gbps per MIPICSI2 2) MIPICSI2 not used (not powered?)	1) 40 mA 2) 13 mA
VDD_HV_PLL	All five PLLs operating at 1 GHz VCO frequency	35 mA
VDD_HV_LFASTPLL	Use case: 1) PLL operating with 320 MHz (LFAST used) 2) PLL not operational (LFAST not used)	1) 24 mA 2) .1 mA
VDD_HV_FXOSC	Shared supply for FXOSC operating with 40 MHz crystal and FIRC oscillator	5 mA
VDD_HV_PMC	As per default usage (no use case differentiation)	10 mA
VDD_HV_EFUSE	Use case: 1) eFuse programming happening	1) 10 mA
VDD_LV_PLL	All five PLLs operating at 1 GHz VCO frequency	80 mA
PCIE_VP	Use case: 1) 5 GHz operation (PCIe 2.0) 2) Reset/idle	1) 80 mA 2) 30 mA
PCIE_VPH	Use case: 1) 5 GHz operation (PCIe 2.0) 2) Reset/idle	1) 50 mA 2) 20 mA

1. Includes SoC, GPU, and ARM supply combinations depending on use case description
2. Data in column represents 125 °C and 1.01 V vdd conditions
3. Adder to the static idd current component. 4xCortex A53 executing Dhrystone MIPS in AArch64 and the interconnect, System RAM, FastDMA, Cortex M4, peripheral bridges, FCCU, CSE, MEMU, PCIe, and STCU are clocked - static power consumption excluded.

4.5 Electrostatic discharge (ESD) specifications

Electrostatic discharges are applied to the pins of each sample in conformity with AEC-Q100-002/-011 to meet the HBM and CDM ratings described below.

Downloaded from Arrow.com.

Table 6. ESD ratings[1]

Symbol	Parameter	Conditions	Class	Max value[2]	Unit
$V_{ESD(HBM)}$	Electrostatic discharge (Human Body Model)	T_A = 25 °C conforming to AEC-Q100-002	H1C	2000	V
$V_{ESD(CDM)}$	Electrostatic discharge (Charged Device Model)	T_A = 25 °C conforming to AEC-Q100-011	C3A	500	V
				750 (corners)	V

1. A device will be defined as a failure if after exposure to ESD pulses the device no longer meets the device specification requirements. Complete DC parametric and functional testing shall be performed per applicable device specification at room temperature followed by hot temperature, unless specified otherwise in the device specification.
2. Data based on characterization results, not tested in production.

4.6 Electromagnetic Compatibility (EMC) specifications

EMC measurements to IC-level IEC standards are available from NXP on request.

4.7 PCB routing guidelines

DDR3/DDR3L PCB design

- CLK/Addess/Commands
  - Route with 50 ohm controlled impedance and differential pair (CLK) with 100 ohm controlled impedance
  - Use Fly by topology in case of multiple memory components
  - Terminated to VTT with 50 ohm
  - To be referenced with Power, not Ground
  - Address/Cmd to be routed within 66 mils with respect to CLK and to be matched from controller to memory; memory to memory as well
  - All traces to be routed in internal layers
  - Preference is to use only two layers for routing this group
  - Limit the via number to less than three
- Data/Strobe
  - Route with 50 ohm controlled impedance and differential pair (DQS strobe) with 100 ohm controlled impedance
  - Data to be routed within 33 mils with respect to respective strobe
  - To be referenced with Ground
  - All traces to be routed in internal layers
  - Strictly to be routed in only two layers
  - Avoid more than two vias

LPDDR2 PCB design

- CLK/Addess/Commands

Downloaded from Arrow.com.

    - Route with 50 ohm controlled impedance and differential pair (CLK) with 100 ohm controlled impedance
    - To be referenced with Power, not Ground
    - Address/Cmd to be routed within 66 mils with respect to CLK and to be matched from controller to memory
    - All traces to be routed in internal layers and delay should be less than 150 ps
    - Preference is to use only two layers for routing this group
    - Limit the via number to less than three
- Data/Strobe
    - Route with 50 ohm controlled impedance and differential pair (DQS strobe) with 100 ohm controlled impedance
    - Data to be routed within 33 mils with respect to respective strobe
    - To be referenced with Ground
    - All traces to be routed in internal layers and delay should be less than 150 ps
    - Strictly to be routed in only two layers
    - Avoid more than two vias

GPIO Interfaces

- QuadSPI
    - Put 22 ohm series termination on board when operating with DSE <2:0> 111
- TRACE
    - Put 22 ohm series termination on board when operating with DSE <2:0> 111
- ENET
    - Put 22 ohm series termination on board when operating with DSE <2:0> 111

5 I/O parameters

5.1 General purpose I/O parameters

5.1.1 GPIO speed at various voltage levels

NOTE

Rise/fall times numbers in Datasheet are guaranteed by design; to obtain actual rise/fall times parameters with specific packages and boards, use appropriate I/O IBIS model.

Downloaded from Arrow.com.

Table 7. GPIO rise/fall times (1.8 V range)

Parameter	Symbol	Drive strength ipp_dse<1:0>	Slew rate	Test conditions	Typ	Max	Unit
IO output transition time, rise/fall[1]	tpr	011	slow	15 pF Cload on pad ipp_do input transition time 120 ps		2.56/2.51	ns
			fast			1.97/2.20	
		100	slow			3.08/3.02	
			fast			2.59/2.58	
		101	slow			2.56/2.42	
			fast			1.84/1.96	
		111	slow			1.82/1.67	
			fast			1.13/1.24	

1. Max condition: wcs model, 0.9 V vddi, 1.62 V ovdd, and 125 °C. Input transition time is 120 ps.

   Slow slew rate means ipp_fsel = ‘00’, fast slew rate means ipp_fsel = ‘11’

Table 8. GPIO rise/fall times (2.5 V range)

Parameter	Symbol	Drive strength ipp_dse<1:0>	Slew rate	Test conditions	Typ	Max	Unit
IO output transition time, rise/fall[1]	tpr	011	slow	15 pF Cload on pad ipp_do input transition time 120 ps		3.44/3.04	ns
			fast			2.75/2.55	
		100	slow			4.05/3.54	
			fast			3.56/2.97	
		101	slow			3.39/2.93	
			fast			2.72/2.47	
		111	slow			2.31/2.03	
			fast			1.80/1.75	

1. Max condition for tpr: wcs model, 0.9 V vddi, 2.25 V ovdd, and 125 °C. Input transition time is 125 ps. Slow slew rate means ipp_fsel = ‘00’, fast slew rate means ipp_fsel = ‘11’

Table 9. GPIO rise/fall times (3.3 V range)

Parameter	Symbol	Drive strength ipp_dse<1:0>	Slew rate	Test conditions	Typ	Max	Unit
IO output transition time, rise/fall[1]	tpr	011	slow	15 pF Cload on pad ipp_do input transition time 120 ps		3.47/3.16	ns
			fast			2.90/2.73	
		100	slow			4.09/3.58	
			fast			3.73/3.07	
		101	slow			3.29/3.00	
			fast			2.68/2.37	
		111	slow			2.23/2.18	
			fast			1.47/1.57	

1. Max condition for tpr: wcs model, 0.9 V vddi, 2.97 V ovdd, and 125 °C. Input transition time is 120 ps.

Downloaded from Arrow.com.

slow slew rate means ipp_fsel = ‘00’, fast slew rate means ipp_fsel = ‘11’

5.1.2 DC electrical specifications

Table 10. DC electrical specifications

Symbol	Parameter	Test conditions	Min	Typ	Max	Unit
Voh	High-level output voltage	Ioh=-100 µA	ovdd[1]-0.15	—	—	V
Vol	Low-level output voltage	Iol=100 µA	—	—	0.15	V
Vihf	High-Level DC input voltage	—	0.7*ovdd	—	ovdd	V
Vil	Low-Level DC input voltage	—	0	—	0.2*ovdd	V
Iin[2]	Input current (no pull-up/down)	Vin = ovdd or 0	—	—	8	µA
Iin_33pu[2]	Input current (33 kilohm PU)	Vin = 0 Vin = ovdd	—	—	220 6	µA
Iin_50pu[2]	Input current (50 kilohm PU)	Vin = 0 Vin = ovdd	—	—	150 6	µA
Iin_100pu[2]	Input current (100 kilohm PU)	Vin = 0 Vin = ovdd	—	—	60 6	µA
Iin_100pd[2]	Input current (100 kilohm PD)	Vin = 0 Vin = ovdd	—	—	8 50	µA

1. ovdd is the IO supply for the pads.
2. Max condition: bcs model, 3.6 V, and 125 °C. These values are for I/O buffers.

NOTE

After bootup, application software should switch to manual voltage detect mode using VSEL_x settings of SRC_GPR14 register to ensure optimum performance of the GPIO pads. Please refer to SRC chapter in the Reference Manual for the register details.

Table 11. Current-draw Characteristics for DDR_VREF

Symbol	Parameter	Min	Max	Unit
DDR_VREF	Current-draw characteristics for DDR_VREF	—	1	mA

5.2 DDR pads

Downloaded from Arrow.com.

5.2.1 Boot Configuration Pins Specification

Value driven on RCON and BOOTMOD pins should be stable for atleast 1 µs after RESET pin is deasserted.

5.2.2 DDR3 mode

5.2.2.1 DDR3 mode DC electrical specifications

Table 12. DDR3 mode DC electrical specifications

Parameter	Symbol	Test conditions	Min	Typ	Max	Unit
High-level output voltage	Voh	Ioh=-100 µA	0.8*ovdd	—	—	V
Low-level output voltage	Vol	Iol=100 µA	—	—	0.2*ovdd	V
High-level DC input voltage	Vih (DC)	—	Vref + 0.2	—	ovdd	V
High-level DC input voltage	Vil (DC)	—	ovss	—	Vref - 0.2	V
Input reference voltage	Vref	—	0.49*ovdd	0.5*ovdd	0.51*ovdd	V
Termination voltage[1]	Vtt	—	0.49*ovdd	0.5*ovdd	0.51*ovdd	V
Input current (no pullup/pulldown)[2]	Iin	Vi = 0 or ovdd	—	—	5	µA
Pullup/pulldown impedance mismatch	MMpupd	34 Ohm full strength driver	-10	—	+10	%
Driver 240 Ohm unit calibration resolution	Rres	—	—	—	10	Ω
Rkeep[3]	Pad keeper resistance	—	20	—	50	kΩ

1. Vtt is expected to track ovdd/2.
2. Typ condition: typ model, 1.5V, and 25 °C. Max condition: bcs model, 1.575V, and -40 °C. Min condition: wcs model, 1.425V, and 125 °C.
3. Typ condition: typ model, 1.5 V, and 25 °C, max condition: wcs model, 1.425 V, and 125 °C, min condition: bcs model, 1.575 V, and -40 °C.

5.2.3 DDR3L mode

5.2.3.1 DDR3L mode DC electrical specifications

Table 13. DDR3L mode DC electrical specifications

Parameter	Symbol	Test conditions	Min	Typ	Max	Unit
High-level output voltage	Voh	Ioh = -100 µA	0.8*ovdd	—	—	V
Low-level output voltage	Vol	Iol = 100 µA	—	—	0.2*ovdd	V
High-level DC input voltage	Vih (DC)	—	Vref + 0.2	—	ovdd	V

Table continues on the next page...

Downloaded from Arrow.com.

Table 13. DDR3L mode DC electrical specifications (continued)

Parameter	Symbol	Test conditions	Min	Typ	Max	Unit
High-level DC input voltage	Vil (DC)	—	ovss	—	Vref - 0.2	V
Input reference voltage	Vref	—	0.49*ovdd	0.5*ovdd	0.51*ovdd	V
Vref current draw	Icc-vref	—	—	—	1	mA
Termination voltage	Vtt	—	0.49*ovdd	0.5*ovdd	0.51*ovdd	V
Input current (no pullup/pulldown)	Iin	Vi = 0 or ovdd	—	—	5	µA
Pullup/pulldown impedance mismatch (full strength driver)	MMpupd	—	-10	—	+10	%
Driver unit (240 Ohm) calibration resolution	Rres	—	—	—	10	Ω
Rkeep	Pad keeper resistance	—	20	—	50	kΩ

5.2.4 LPDDR2 mode

5.2.4.1 LPDDR2 mode DC electrical specifications

Table 14. LPDDR2 mode DC electrical specifications

Parameter	Symbol	Test conditions	Min	Typ	Max	Unit
High-level output voltage	Voh	Ioh = -100 µA	0.9*ovdd	—	—	V
Low-level output voltage	Vol	Iol = 100 µA	—	—	0.1*ovdd	V
Input reference voltage	Vref	—	0.49*ovdd	0.5*ovdd	0.51*ovdd	V
High-level DC input voltage	Vih (DC)	—	Vref + 0.17	—	ovdd	V
High-level DC input voltage	Vil (DC)	—	ovss	—	Vref - 0.17	V
Input current (no pullup/ pulldown)[1]	Iin	Vi = ovdd or 0	—	—	5	µA
Pullup/pulldown impedance mismatch	MMpupd	34 Ohm full strength driver	-15	—	+15	%
Driver 240 Ohm unit calibration resolution	Rres	—	—	—	10	Ω
Rkeep[2]	Pad keeper resistance	—	20	—	50	kΩ

1. Typ condition: typ model, 1.2 V, and 25 °C. Max condition: bcs model, 1.32 V, and -40 °C. Min condition: wcs model, 1.14 V, and 125 °C.
2. Typ condition: typ model, 1.2 V, and 25 °C, max condition: wcs model, 1.14 V, and 125 °C, min condition: bcs model, 1.32 V, and -40 °C.

Downloaded from Arrow.com.

6 Peripheral operating requirements and behaviors

6.1 Analog modules

6.1.1 ADC electrical specifications

The device provides a 12-bit Successive Approximation Register (SAR) Analog-to-Digital Converter.

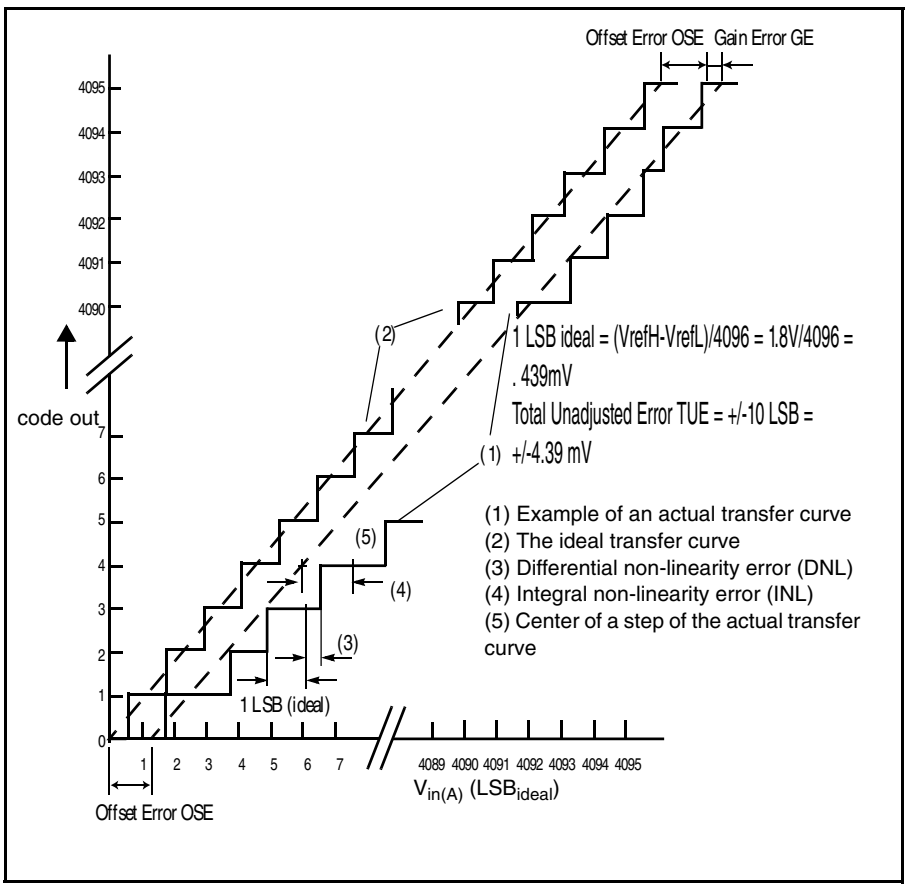

Figure 2. ADC characteristics and error definitions

NOTE

While measuring scaled supply voltages on ADC Channels, Maximum (+5/-10%) variation can be expected .

Downloaded from Arrow.com.

6.1.1.1 Input equivalent circuit

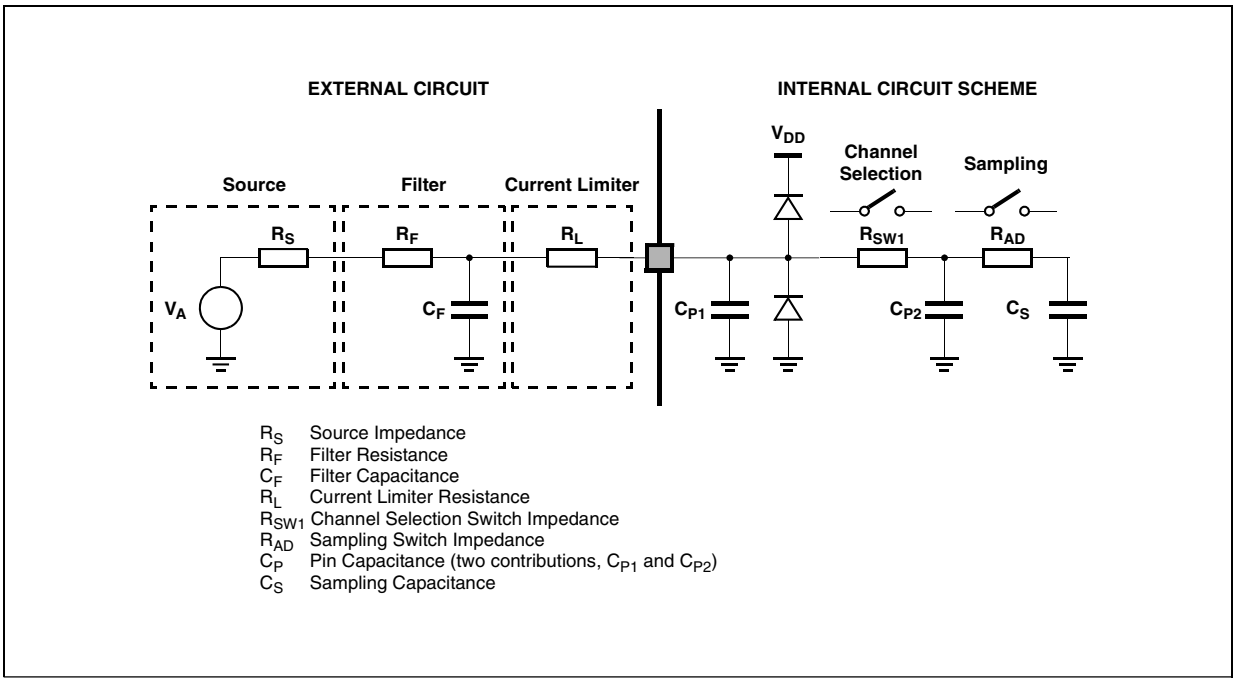

Figure 3. Input equivalent circuit

Table 15. ADC conversion characteristics

Symbol	Parameter	Conditions	Min	Typ	Max	Unit
f_{CK}	ADC Input Clock frequency (Bus clock)	—	20	—	80	MHz
f_{AD_clk}	ADC Conversion clock frequency[1]		20		40	MHz
f_s	Sampling frequency	—	—	—	0.5	MHz
t_{sample}	Sample time[2]		500	—	—	ns
t_{conv}	Conversion time[3]		1400	—	—	ns
C_S	ADC input sampling capacitance	—	—	—	5	pF
C_{P1}	ADC input pin capacitance 1	—	—	—	5	pF
C_{P2}	ADC input pin capacitance 2	—	—	—	0.8	pF
R_{SW1}	Internal resistance of analog source	—	—	—	875	Ω
R_{AD}	Internal resistance of analog source	—	—	—	825	Ω
INL[4]	Integral non linearity	—	–3	—	3	LSB
DNL	Differential non linearity	—	–2	—	2	LSB
OFS	Offset error	—	–6	—	6	LSB
GNE	Gain error	—	–6	—	6	LSB
Input (single ADC channel)	Max leakage	125C	—	—	2000	nA
TUE	Total unadjusted error	—	–8	—	8	LSB

Downloaded from Arrow.com.

1. Please see description of Clock & reset section in ADC chapter in Reference Manual for details. User need to generate AD_clk = 40 MHz for 0.5 MSPS operation. For example, if f_{ck} = 80 MHz, configure MCR[8].ADCLKSE = 0 and MCR[4].ADCLKDIV = 0 (default).
2. During the sample time the input capacitance CS can be charged/discharged by the external source. The internal resistance of the analog source must allow the capacitance to reach its final voltage level within t_{sample}. After the end of the sample time t_{sample}, changes of the analog input voltage have no effect on the conversion result. Values for the sample clock t_{sample} depend on programming. For internal ADC channels, the minimum sampling time required is 3 microsecond.
3. This parameter does not include the sample time t_{sample}, but only the time for determining the digital result and the time to load the result register with the conversion result.
4. Specifications are quoted here for input signal ranging from 150 mV to VDD_HV_ADC - 150 mV. For signals outside this range, the Specifications may degrade beyond limits specified in this table.

6.1.2 Thermal Monitoring Unit (TMU)

The following table describes TMU electrical characteristics.

Table 16. TMU electrical characteristics

Symbol	Parameter	Conditions	Value			Unit
			Min	Typ	Max	
T_j	Temperature monitoring range	—	-40	—	125	°C
T_{SENS}	Sensitivity	—	—	2.5	—	mV/°C
T_{ACC}	Accuracy	T_J = -40 °C to 40 °C	-10	—	+10	°C
		T_J = 40 °C to 125 °C	-5	—	+5	°C

6.2 Clocks and PLL interfaces modules

6.2.1 Main oscillator electrical characteristics

The device provides an oscillator/resonator driver of a Pierce-type structure.

Table 17. Main oscillator electrical characteristics

Symbol	Parameter	Conditions	Value			Unit
			Min	Typ	Max	
$f_{FXOSCHS}$	Oscillator frequency	—	—	24.0 or 40.0	n/a	MHz
$T_{FXOSCHSSU}$	Oscillator start-up time	$f_{FXOSCHS}$ = 24,40 MHz	—	—	2[1]	ms
V_{IH}	Input high level CMOS Schmitt Trigger	Vref = 0.5*VDD_HV_OSC where VDD_HV_OSC is FXOSC HV Supply	Vref+0.5	—	VDD_HV_OSC	V
V_{IL}	Input low level CMOS Schmitt Trigger	Vref = 0.5*VDD_HV_OSC where VDD_HV_OSC is FXOSC HV Supply	0	—	Vref – 0.5	V

Downloaded from Arrow.com.

1. The start-up time is dependent upon crystal characteristics, board leakage, etc, high ESR and excessive capacitive loads can cause long start-up time

Following crystals are used in internal crystal oscillator validation:

- NX3225 – 24 MHz; Load capacitance = 8 pF
- NX5032 – 24 MHz; Load capacitance = 8 pF
- NX3225 – 40 MHz; Load capacitance = 8 pF
- NX5032 – 40 MHz; Load capacitance = 8 pF

6.2.2 48 MHz FIRC electrical characteristics

Table 18. FIRC electrical specifications

Symbol	Parameter	Conditions	Value			Unit
			Min	Typ	Max	
F_{Target}	FIRC target frequency (trimmed)	—	—	48	—	MHz
δF_{var_T}	FIRC frequency variation with respect to supply and temperature after process trimming	—	-10	—	+10	%

6.2.3 PLL electrical specifications

Table 19. PLL electrical characteristics [1]

Symbol	Parameter	Conditions	Value			Unit
			Min	Typ	Max	
f_{PLLIN}	PLL input clock[2]	—	20[3]	—	40[3]	MHz
Δ_{PLLIN}	PLL input clock duty cycle [2]	—	40	—	60	%
$t_{PLLLOCK}$	PLL lock time	—	—	—	100	µs
Δ_{PLLT}	Period jitter	—	—	—	150	ps
Δ_{PLLTIE}	TIE	—	—	—	560	ps
f_{PLLMOD}	SSCG modulation frequency	—	—	—	32	kHz
δ_{PLLMOD}	SSCG modulation depth	—	–.50	—	– 5.4[4]	%

1. The jitter values are gauranteed for following conditions:
   1. Measurement being done on LFAST TX pad with observed frequency greater than 250 M and less than 320 M
   2. Minimum SOC activity - Operations required to observe clock must be functional.
   3. Maximum frequency change in SSCG modulation is limited by following relation: Modulation Depth * VCO Frequency < PLL Reference (PFD) Frequency
2. PLL0IN clock retrieved from either internal RCOSC or external FXOSC clock. Input characteristics are granted when using internal RCOSC or external oscillator is used in functional mode.

Downloaded from Arrow.com.

3. The PLLIN clock is the frequency after the PREDIV(Pre-divider) value division, and before the Phase detector block. Please refer to the PLLs section of clocking chapter in the Reference Manual.
4. STEPSIZE x STEPNO < 18432

Table 20. PLL maximum frequencies

PLL frequencies[1]							
ΔPLL	VCOCLKOUT[2]	PHI0	PHI1	DFS1	DFS2	DFS3	DFS4
ARM-PLL	1000	1000	1000	266	600	600	NA
ΔPERIPH-PLL	1200	400	100	NA	NA	NA	NA
ΔENET-PLL	1000	500	1000	350	350	416	104
DDR-PLL	1066	533	1066	500	500	350	NA
VIDEO-PLL	1200	600	NA	NA	NA	NA	NA

1. The frequency may vary according to the use-case, but should not be more than the maximum mentioned in the table above.
2. Minimum VCOCLKOUT frequency supported is 650 MHz.

6.2.4 DFS electrical specifications

DFS takes input clock from PLL output. Here is relation between input and output clock of each phase divider:

F(dfsclkout) = F(dfsclkin)/[mfi+(mfn/256)]

mfi : integer part of division [1:255]

mfn: Fractional part of division [0:255]

Table 21. DFS electrical specification[1]

Parameter	Min	Typical	Max	Unit
Input Frequency	650	—	1300	M
Period jitter	—	—	300	ps
TIE	—	—	600	ps

1. All DFSes have same specifications. DFS programming should take maximum clock frequencies as per Reference Manual recommendation.

6.2.5 LFAST PLL Electrical Specifications

The following table lists AC specification of the LFAST PLL block.

Table 22. LFAST PLL Interface AC Specifications

Parameter	Min	Typical	Max	Unit
PLL input clock	10	—	26	MHz

Table continues on the next page...

Downloaded from Arrow.com.

Table 22. LFAST PLL Interface AC Specifications (continued)

Parameter	Min	Typical	Max	Unit
PLL VCO Frequency	312	—	320	MHz
Phase Lock time	—	—	50	µs
RMS Period Jitter	—	—	40[1]	ps
Long Term Jitter[2] Random Jitter	—	84	—	ps
Deterministic Jitter	—	80	—	ps
Total Jitter @ BER 10^{-9}	—	1.09	1.31[3]	ns

1. When SysClk = 26 MHz
2. VCO clock measured over 100 µs acquisition at ZipWire TX LVDS across 100 ohm load
3. Only Total Jitter is given a maximum specification as variation of Random and Deterministic jitter is not critical. Any combined Random and Deterministic jitter yielding a Total Jitter @ 10^{-9} BER is within maximum specification and is acceptable

6.3 Memory interfaces

6.3.1 QuadSPI AC specifications

- Measurements are with a load of 35 pF on output pins. Input slew: 1 ns, DSE[2:0] = 111, and FSEL[1:0] = 11
- QuadSPI input timing is with 15 pF load on flash output.
- QuadSPI_MCR[DQS_EN] must be set as 1 for SDR READ

The following table lists various QuadSPI modes and their corresponding configurations. Please refer to the device Reference Manual for register and bit descriptions.

Table 23. QuadSPI read/write settings

Modes supported by QuadSPI		QuadSPI_MCR[DDR_EN]	QuadSPI_MCR[DQS_EN]	QuadSPI_MCR [DQS_CD]	QuadSPI_MCR [REFCLK_SEL]	QuadSPI_MCR [DQS_MDSL]	QuadSPI_SOCCR [FDCC_FB][1]	QuadSPI_SOCCR [FDCC_FA][1]	QuadSPI_FLSHCR[TDH]
SDR mode	Internal DQS mode	0	1	000	1	1	39h @ 3.3 V 3Fh @ 1.8 V	39h @ 3.3 V 3Fh @ 1.8 V	00
DDR mode	Internal DQS mode	1	1	000	0	1	4Ah @ 3.3 V 50h @ 1.8 V	4Ah @ 3.3 V 50h @ 1.8 V	01
	External DQS mode (supported	1	1	000	0	0	00h	00h	01

Downloaded from Arrow.com.

Table 23. QuadSPI read/write settings

Modes supported by QuadSPI		QuadSPI_MCR[DDR_EN]	QuadSPI_MCR[DQS_EN]	QuadSPI_MCR [DQS_CD]	QuadSPI_MCR [REFCLK_SEL]	QuadSPI_MCR [DQS_MDSL]	QuadSPI_SOCCR [FDCC_FB][1]	QuadSPI_SOCCR [FDCC_FA][1]	QuadSPI_FLSHCR[TDH]
	by HyperFlash)								

1. Device qualification is not complete.

SDR mode

For SDR mode, QuadSPI_MCR[DQS_EN] must be set as '1'.

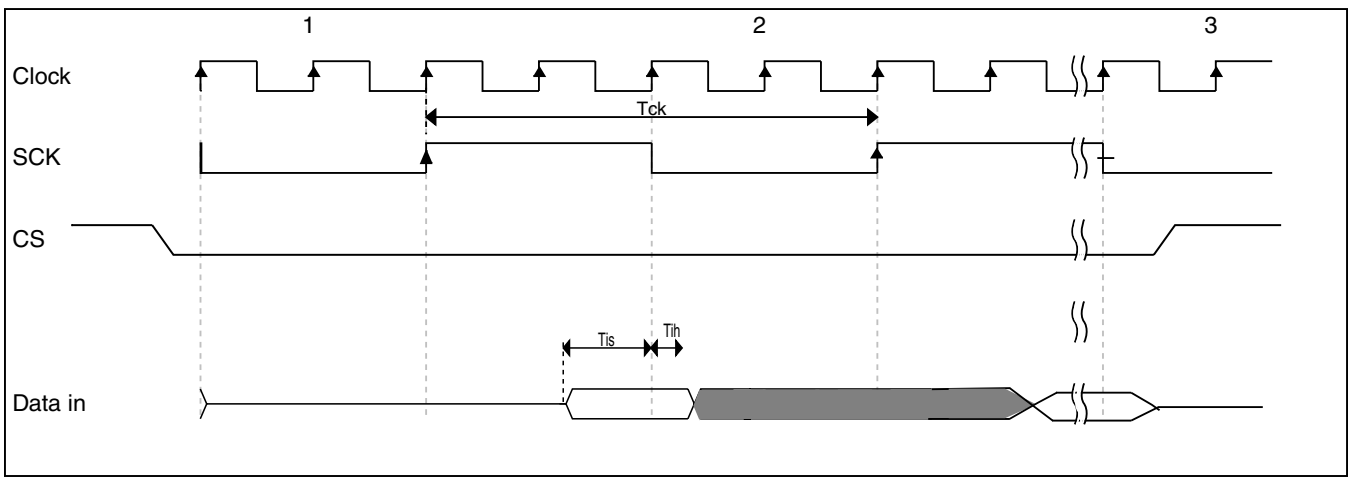

Figure 4. QuadSPI input timing (SDR mode) diagram

NOTE

- A negative time indicates the actual capture edge inside the device is earlier than clock appearing at pad.
- All board delays need to be added appropriately
- Input hold time being negative does not have any implication or max achievable frequency

Table 24. QuadSPI input timing (SDR mode) specifications

Symbol	Parameter	Value		Unit
		Min	Max	
T_{is}	Setup time for incoming data	2.5	—	ns
T_{ih}	Hold time for incoming data	1	—	ns
F_{SCK}	SCK clock frequency	—	104	MHz

Downloaded from Arrow.com.

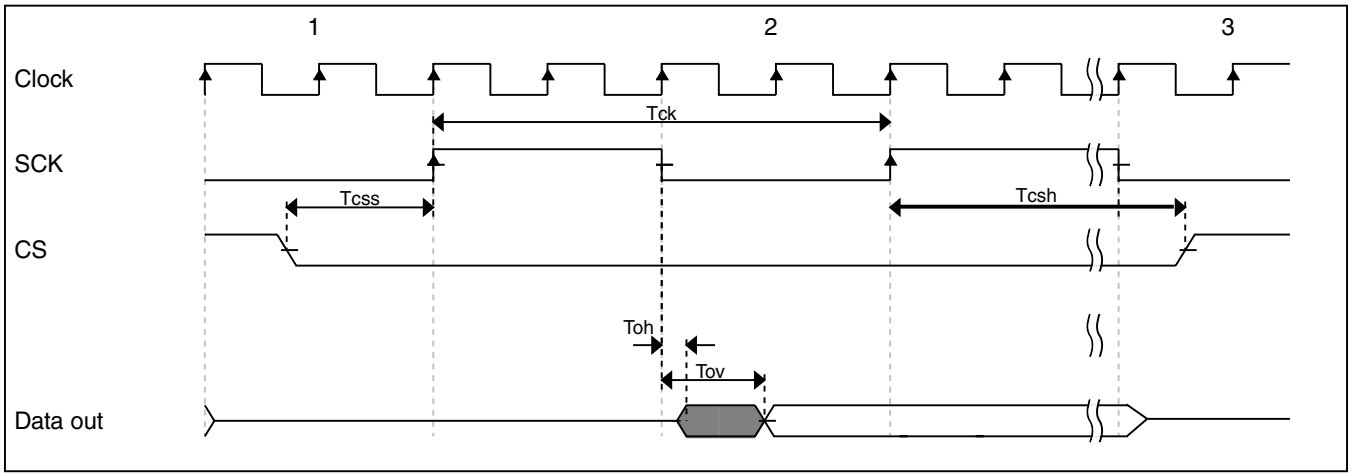

Figure 5. QuadSPI output timing (SDR mode) diagram

Table 25. QuadSPI output timing (SDR mode) specifications

Symbol	Parameter	Value		Unit
		Min	Max	
T_{ov}	Output Data Valid	—	1.5	ns
T_{oh}	Output Data Hold	–1.5	—	ns
F_{SCK}	SCK clock frequency	—	104	MHz
T_{css}	Chip select output setup time	2	—	ns
T_{csh}	Chip select output hold time	1	—	ns

NOTE

For any frequency setup and hold specifications of the memory should be met.

DDR mode

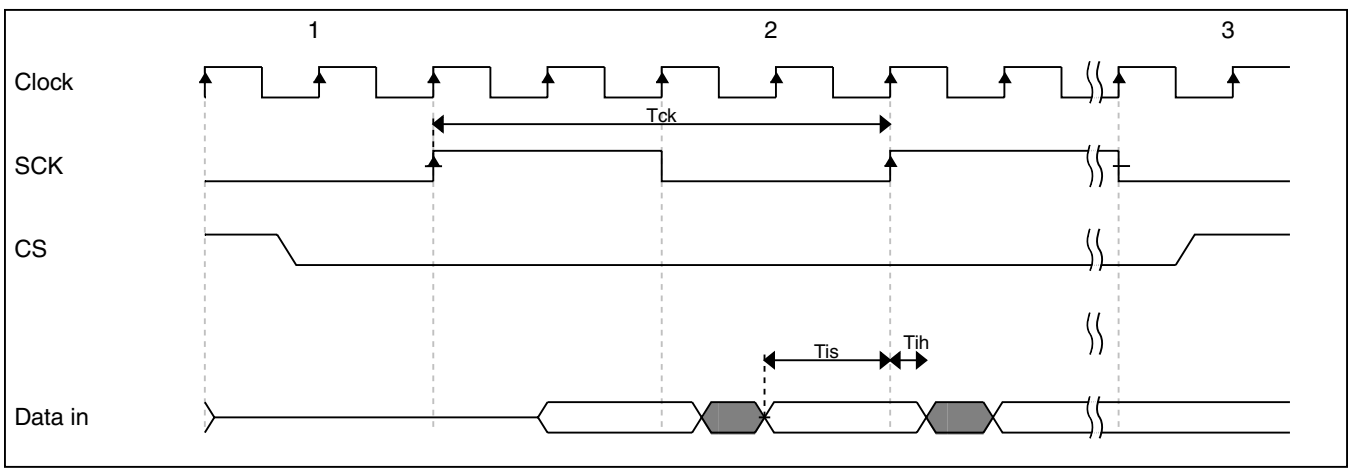

Figure 6. QuadSPI input timing (DDR mode) diagram

Downloaded from Arrow.com.

Table 26. QuadSPI input timing (DDR mode) specifications

Symbol	Parameter	Value		Unit	Configuration
		Min	Max		
T_{is}	Setup time for incoming data	2.5 @ 3.3 V 2 @ 1.8 V	—	ns	—
T_{ih}	Hold time for incoming data	1.5	—	ns	—
F_{SCK}	SCK Clock Frequency	—	50 (Internal DQS) @ 3.3 V 56 (Internal DQS) @ 1.8 V	MHz	See Table 23

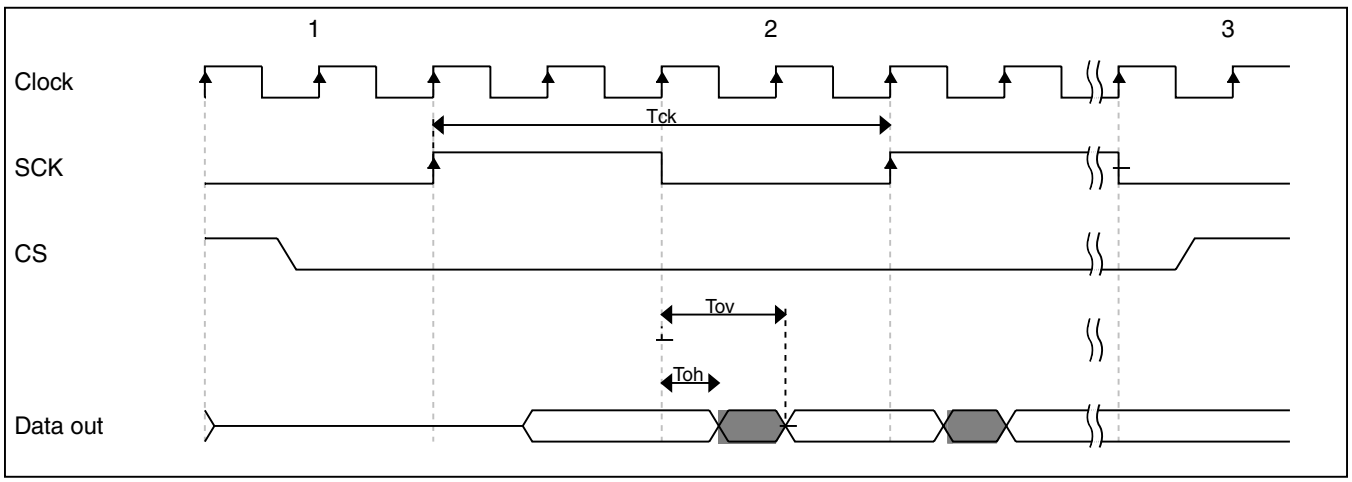

Figure 7. QuadSPI output timing (DDR mode) diagram

Table 27. QuadSPI output timing (DDR mode) specifications

Symbol	Parameter	Value		Unit
		Min	Max	
T_{ov}	Output Data Valid	—	$1/(4*F_{SCK}) + 1.5$	ns
T_{oh}	Output Data Hold	$1/(4*F_{SCK}) - 1.5$	—	ns

HyperFlash mode

Maximum clock frequency = 100 MHz.

Downloaded from Arrow.com.

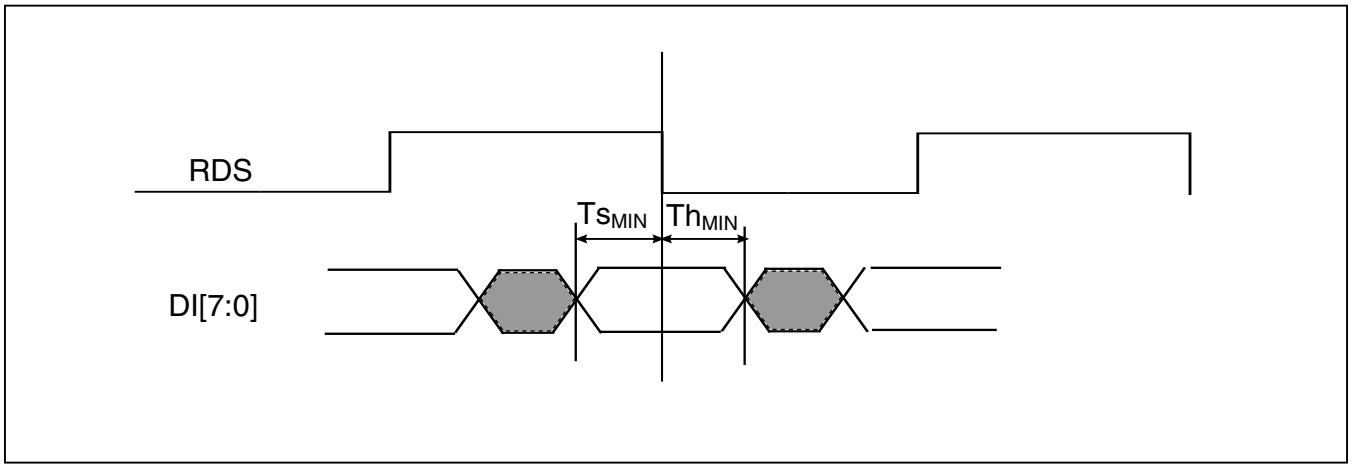

Figure 8. QuadSPI input timing (HyperFlash mode) diagram

Table 28. QuadSPI input timing (HyperFlash mode) specifications

Symbol	Parameter	Value		Unit
		Min	Max	
Ts_{MIN}	Setup time for incoming data	0.950	—	ns
Th_{MIN}	Hold time for incoming data	0.950	—	ns

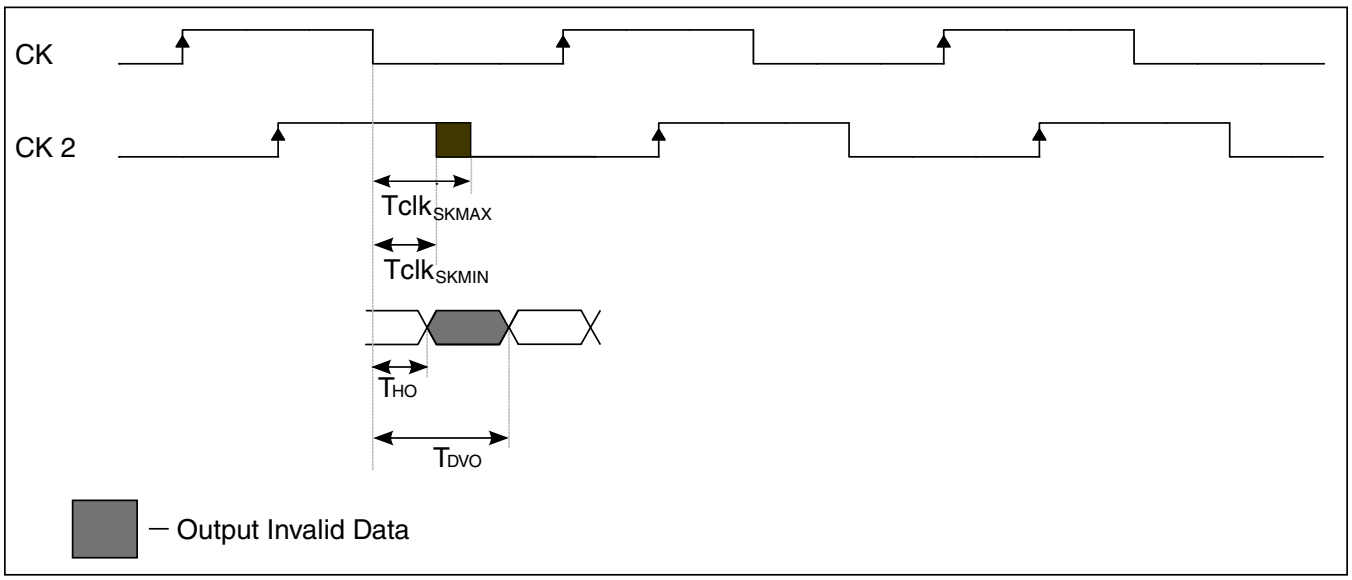

Figure 9. QuadSPI output timing (HyperFlash mode) diagram

Table 29. QuadSPI output timing (HyperFlash mode) specifications

Symbol	Parameter	Value		Unit
		Min	Max	
Tdv_{MAX}	Output Data Valid	—	3.7	ns
T_{ho}	Output Data Hold	1	—	ns

Table continues on the next page...

Downloaded from Arrow.com.

Table 29. QuadSPI output timing (HyperFlash mode) specifications (continued)

Symbol	Parameter	Value		Unit
		Min	Max	
$Tclk_{SKMAX}$	Ck to Ck2 skew max	—	T/4 + 0.150	ns
$Tclk_{SKMIN}$	Ck to Ck2 skew min	T/4 – 0.150	—	ns

6.4 DDR SDRAM Specific Parameters (DDR3, DDR3L, and LPDDR2)

6.4.1 DDR3 and DDR3L timing parameters

NOTE

Operating voltages of DDR3 and DDR3L are different.

Downloaded from Arrow.com.

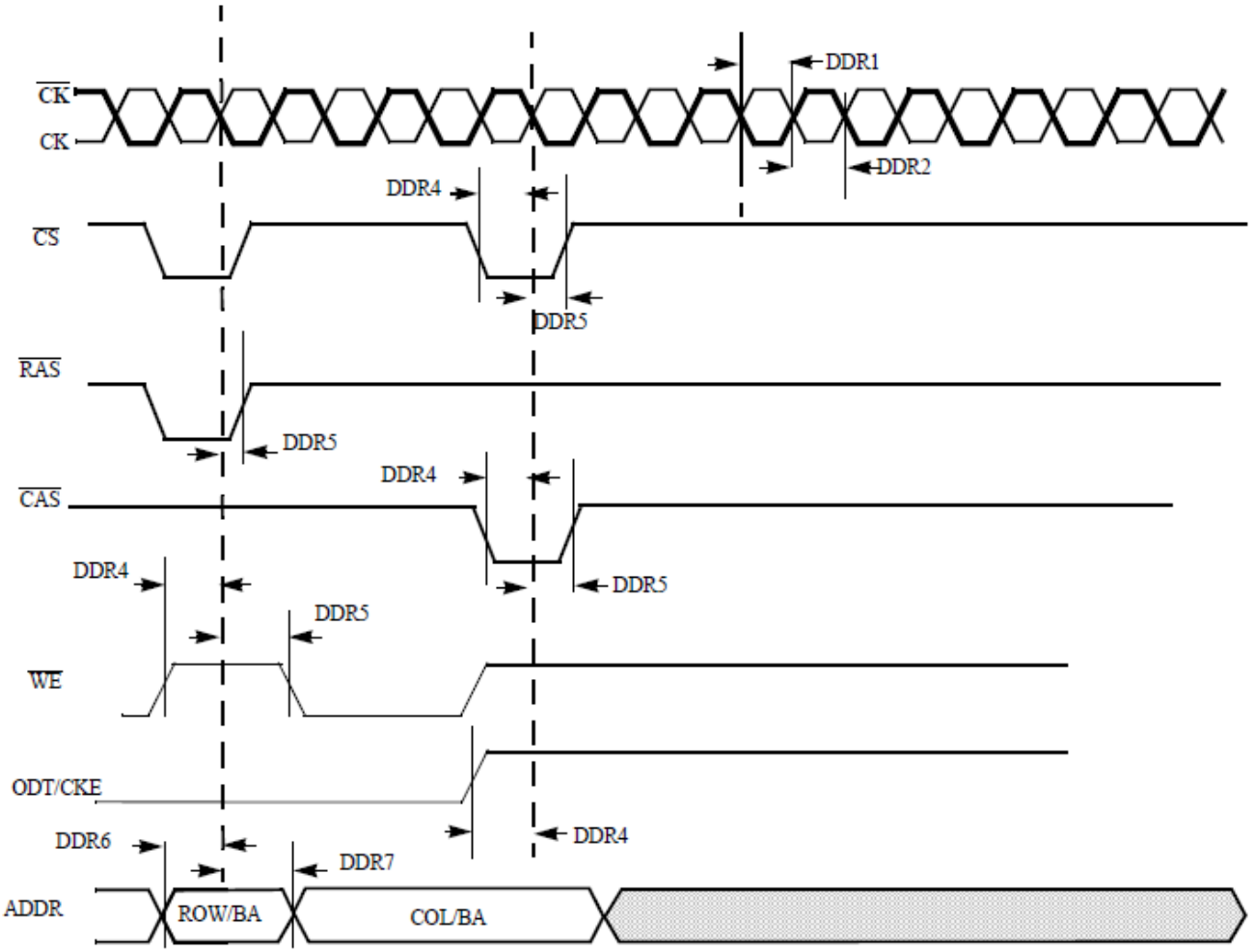

Figure 10. DDR3 and DDR3L command and address timing parameters

NOTE

RESET pin has an external weak pull DOWN requirement if DDR3 memory is NOT required to support content retention in the device low power modes where core voltage is off but DRAM voltage is on.

NOTE

RESET pin has an external weak pull UP requirement if DDR3 memory is required to support content retention in the device low power modes where core voltage is off but DRAM voltage is on.

Downloaded from Arrow.com.

NOTE

CKE pin has an external weak pull down requirement.

Table 30. DDR3 and DDR3L timing parameter

ID	Parameter	Symbol	CK = 533 MHz		Unit
			Min	Max	
DDR1	CK clock high-level width	tCH	0.47	0.53	tCK (avg)
DDR2	CK clock low-level width	tCL	0.47	0.53	tCK (avg)
DDR4	CS, RAS, CAS, CKE, WE, ODT setup time	tIS(base) AC175	125	—	ps
DDR5	CS, RAS, CAS, CKE, WE, ODT hold time	tIH(base) DC100	200	—	ps
DDR6	Address output setup time	tIS(base) AC175	125	—	ps
DDR7	Address output hold time	tIH(base) DC100	200	—	ps

NOTE

All measurements are in reference to Vref level.

NOTE

Measurements were done using balanced load and 25 ohms resistor from outputs to VDD_REF.

Downloaded from Arrow.com.

6.4.2 DDR3 and DDR3L read cycle

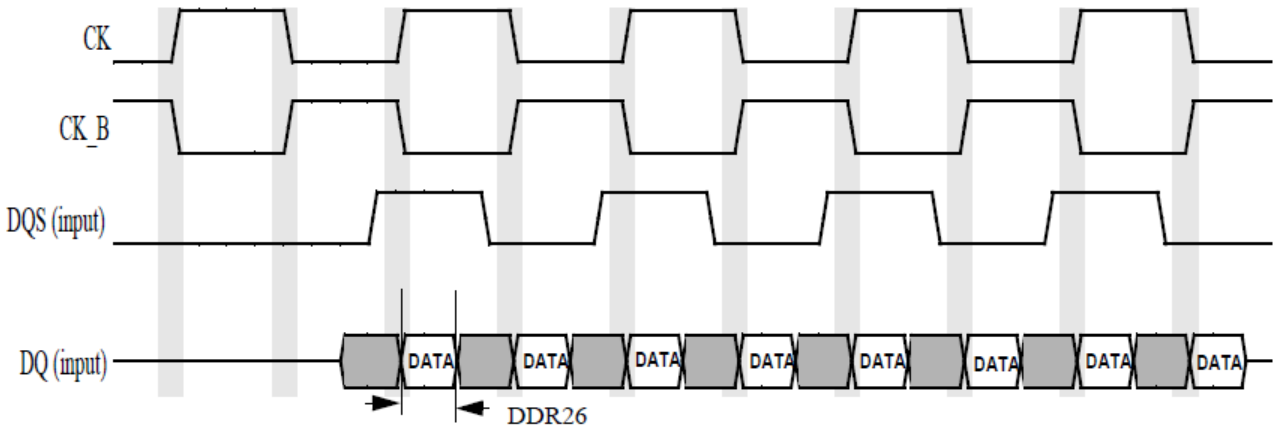

Figure 11. DDR3 and DDR3L read cycle

Table 31. DDR3 and DDR3L read cycle

ID	Parameter	Symbol	CK = 533 MHz		Unit
			Min	Max	
DDR26	Minimum required DQ valid window width	—	563	—	ps

NOTE

To receive the reported setup and hold values, read calibration should be performed in order to locate the DQS in the middle of DQ window.

NOTE

All measurements are in reference to Vref level.

NOTE

Measurements were done using balanced load and 25 ohms resistor from outputs to VDD_REF

Downloaded from Arrow.com.

6.4.3 DDR3 and DDR3L write cycle

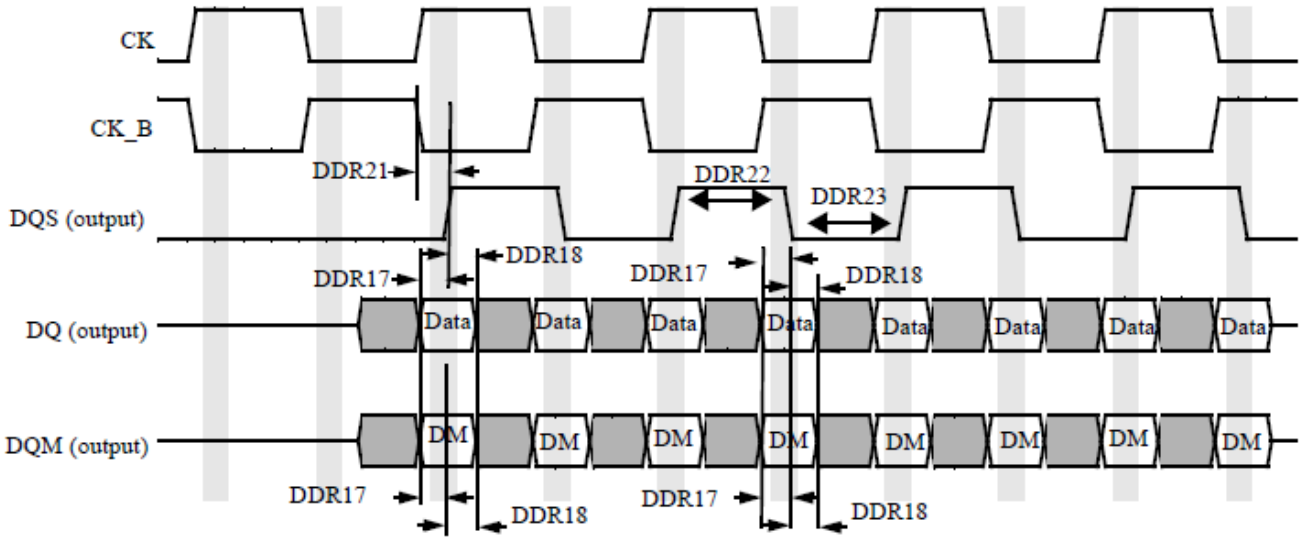

Figure 12. DDR3 and DDR3L write cycle

Table 32. DDR3 and DDR3L write cycle

ID	Parameter	Symbol	CK = 533 MHz		Unit
			Min	Max	
DDR17	DQ and DQM setup time to DQS (differential strobe)	tDS(base) AC175	206	—	ps
DDR18	DQ and DQM hold time to DQS (differential strobe)	tDH(base) DC100	280	—	ps
DDR21	DQS latching rising transitions to associated clock edges	tDQSS	-0.25	+0.25	tCK (avg)
DDR22	DQS high level width	tDQSH	0.45	0.55	tCK (avg)
DDR22	DQS low level width	tDQSL	0.45	0.55	tCK (avg)

NOTE

To receive the reported setup and hold values, write calibration should be performed in order to locate the DQS in the middle of DQ window.

NOTE

All measurements are in reference to Vref level.

NOTE

Measurements were done using balanced load and 25 ohms resistor from outputs to VDD_REF.

Downloaded from Arrow.com.

6.4.4 LPDDR2 timing parameter

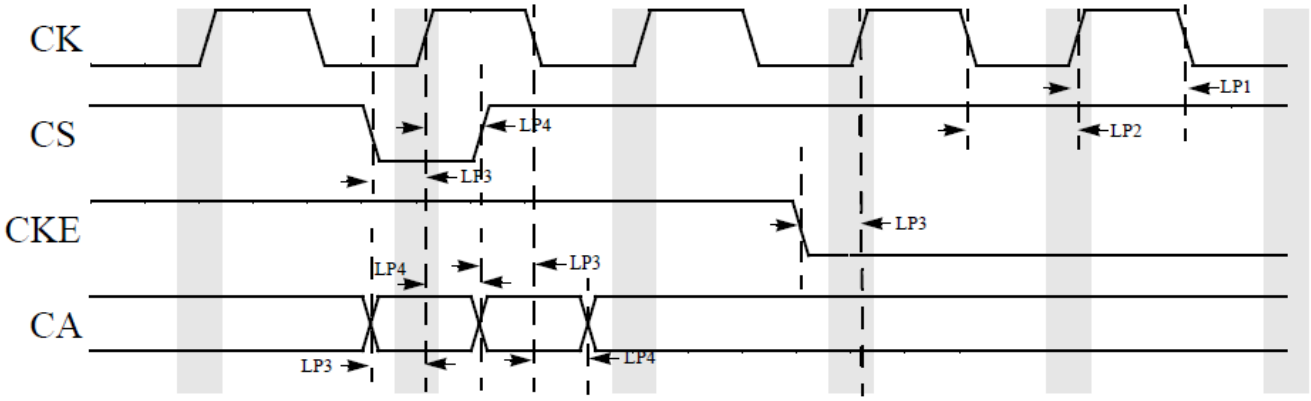

Figure 13. LPDDR2 command and address timing parameter

NOTE

RESET pin has a external weak pull DOWN requirement if LPDDR2 memory is NOT required to support content retention in the device low power modes where core voltage is off but DRAM voltage is on.

NOTE

RESET pin has a external weak pull UP requirement if LPDDR2 memory is required to support content retention in the device low power modes where core voltage is off but DRAM voltage is on.

NOTE

CKE pin has a external weak pull down requirement.

Table 33. LPDDR2 timing parameter

ID	Parameter	Symbol	CK = 533 MHz		Unit
			Min	Max	
LP1	SDRAM clock high-level width	tCH (avg)	0.45	0.55	tCK (avg)
LP2	SDRAM clock LOW-level width	tCL (avg)	0.45	0.55	tCK (avg)
LP3	CS, CKE setup time	tIS(base)	0	—	ps
LP4	CS, CKE hold time	tIH(base)	90	—	ps
LP3	CA setup time	tIS(base)	0	—	ps
LP4	CA hold time	tIH(base)	90	—	ps

NOTE

All measurements are in reference to Vref level.

Downloaded from Arrow.com.

NOTE

Measurements were done using balanced load and 25 ohms resistor from outputs to VDD_REF.

6.4.5 LPDDR2 read cycle

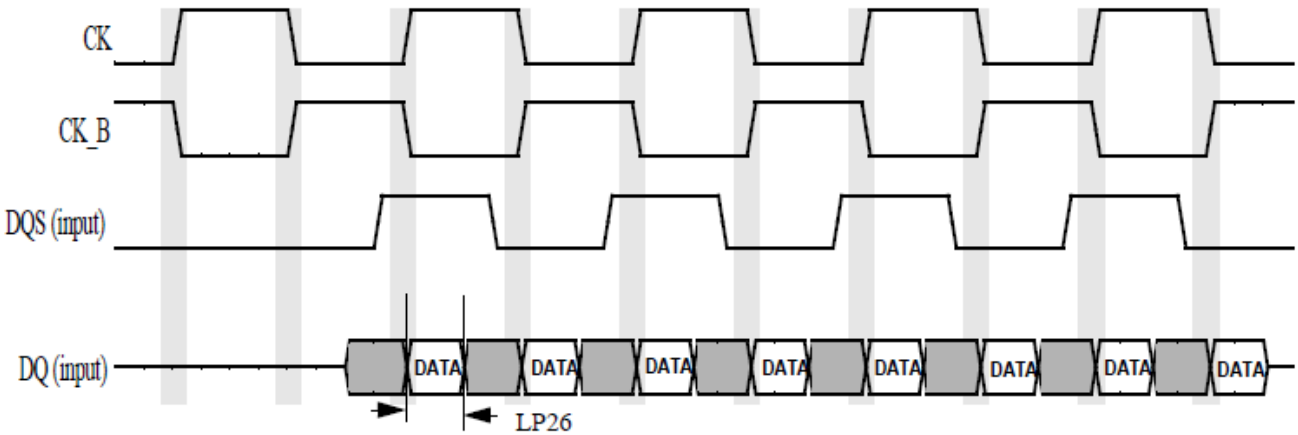

Figure 14. LPDDR2 read cycle

Table 34. LPDDR2 read cycle

ID	Parameter	Symbol	CK = 533 MHz		Unit
			Min	Max	
LP26	Minimum required DQ valid window width for LPDDR2	—	364	—	ps

NOTE

To receive the reported setup and hold values, read calibration should be performed in order to locate the DQS in the middle of DQ window.

NOTE

All measurements are in reference to Vref level.

NOTE

Measurements were done using balanced load and 25 ohms resistor from outputs to VDD_REF

Downloaded from Arrow.com.

6.4.6 LPDDR2 write cycle

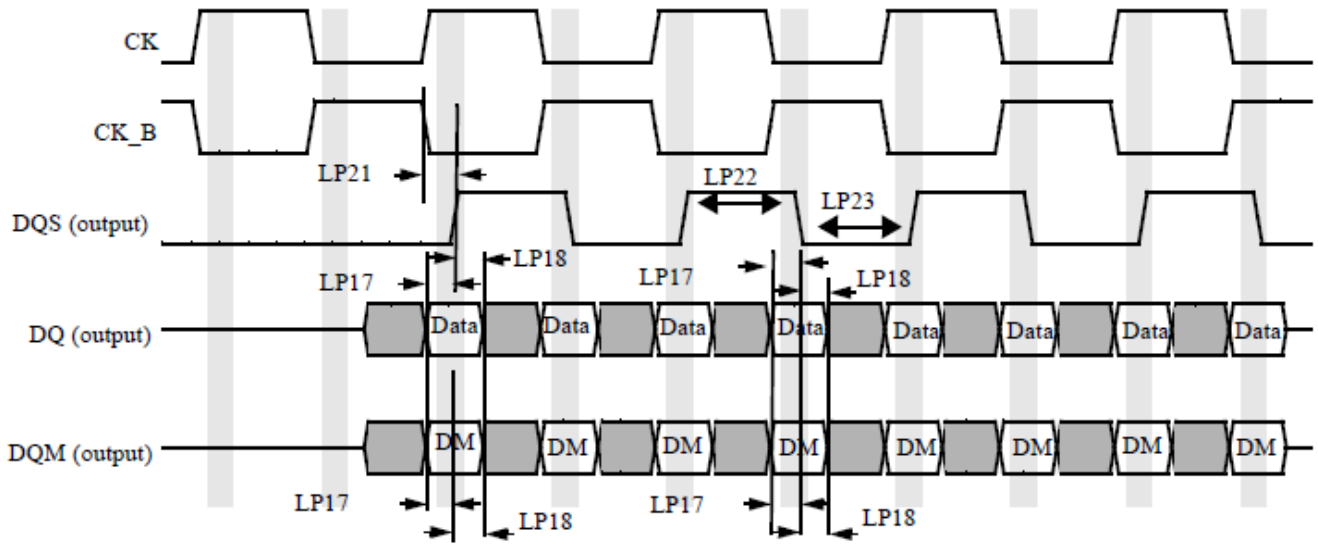

Figure 15. LPDDR2 write cycle

Table 35. LPDDR2 write cycle

ID	Parameter	Symbol	CK = 533 MHz		Unit
			Min	Max	
LP17	DQ and DQM setup time to DQS (differential strobe)	tDS(base)	280	—	ps
LP18	DQ and DQM hold time to DQS (differential strobe)	tDH(base)	220	—	ps
LP21	DQS latching rising transitions to associated clock edges	tDQSS	0.75	1.25	tCK (avg)
LP22	DQS high level width	tDQSH	0.4	—	tCK (avg)
LP23	DQS low level width	tDQSL	0.4	—	tCK (avg)

NOTE

To receive the reported setup and hold values, write calibration should be performed in order to locate the DQS in the middle of DQ window.

NOTE

All measurements are in reference to Vref level.

NOTE

Measurements were done using balanced load and 25 ohms resistor from outputs to VDD_REF.

Downloaded from Arrow.com.

6.5 Communication modules

6.5.1 DSPI timing

Measurements are with a load of 45 pF on output pins. Input slew = 1 ns, DSE[2:0] = 101, and FSEL[1:0] = 11.

Table 36. DSPI timing

No.	Symbol	Parameter	Conditions	Min	Max	Unit
1	t_{SCK}	DSPI cycle time	Master (MTFE = 0)	40[1]	-	ns
			Slave (MTFE = 0)	40	-	
			Slave Receive Only Mode[2]	16	-	
2	t_{CSC}	PCS to SCK delay	-	16[3]	-	ns
3	t_{ASC}	After SCK delay	-	16[4]	-	ns
4	t_{SDC}	SCK duty cycle	-	$t_{SCK}/2$ - 1.5	$t_{SCK}/2$ + 1.5	ns
5	t_A	Slave access time	$\overline{SS}$ active to SOUT valid	-	40	ns
6	t_{DIS}	Slave SOUT disable time	$\overline{SS}$ inactive to SOUT High-Z or invalid	-	15	ns
7	t_{PCSC}	PCSx to $\overline{PCSS}$ time	-	13	-	ns
8	t_{PASC}	$\overline{PCSS}$ to PCSx time	-	13	-	ns
9	t_{SUI}	Data setup time for inputs	Master (MTFE = 0)	15	-	ns
			Slave	2	-	
			Master (MTFE = 1, CPHA = 0)	6	-	
			Master (MTFE = 1, CPHA = 1)	20	-	
10	t_{HI}	Data hold time for inputs	Master (MTFE = 0)	-4	-	ns
			Slave	4	-	
			Master (MTFE = 1, CPHA = 0)	11	-	
			Master (MTFE = 1, CPHA = 1)	-4	-	
11	t_{SUO}	Data valid (after SCK edge)	Master (MTFE = 0)	-	4	ns
			Slave	-	16	
			Master (MTFE = 1, CPHA = 0)	-	12	
			Master (MTFE = 1, CPHA = 1)	-	4	
12	t_{HO}	Data hold time for outputs	Master (MTFE = 0)	-2	-	ns
			Slave	3	-	
			Master (MTFE = 1, CPHA = 0)	5	-	
			Master (MTFE = 1, CPHA = 1)	-2	-	

1. SMPL_PTR should be set to 1. For SPI_CTARn[BR] - 'Baud Rate Scaler' configuration is >= 3.
2. Slave Receive Only Mode can operate at a maximum frequency of 60 MHz. In this mode, the DSPI can receive data on SIN, but no valid data is transmitted on SOUT.
3. This value of 16 ns is with the configuration prescaler values: SPI_CTARn[PCSSCK] - "PCS to SCK Delay Prescaler" configuration is "3" (01h) and SPI_CTARn[CSSCK] - "PCS to SCK Delay Scaler" configuration is "2" (0000h).

Downloaded from Arrow.com.

4. This value of 16 ns is with the configuration prescaler values: SPI_CTARn[PASC] - "After SCK Delay Prescaler" configuration is "3" (01h) and SPI_CTARn[ASC] - "After SCK Delay Scaler" configuration is "2" (0000h).

NOTE

DSPI Timing specs on this chip are valid with Slave in Classic Mode only.

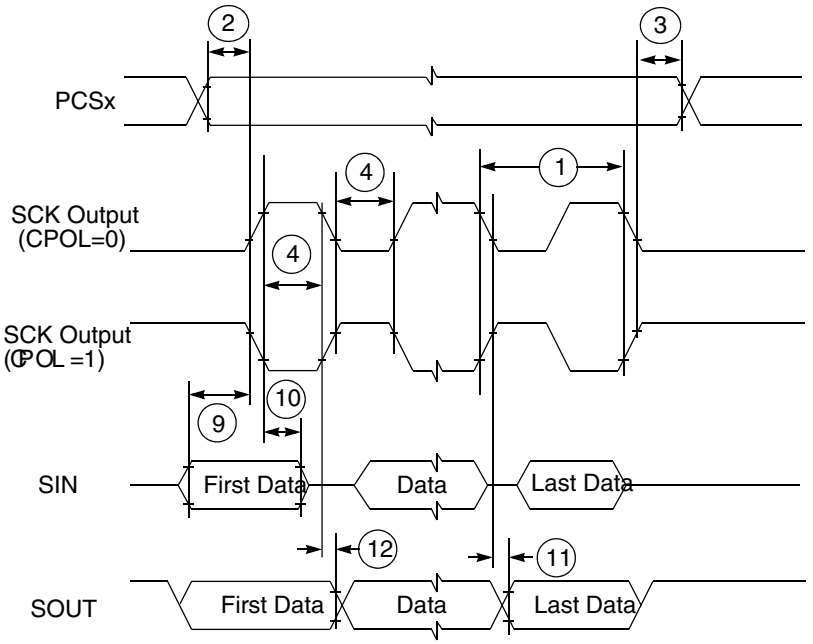

Figure 16. DSPI classic SPI timing — master, CPHA = 0

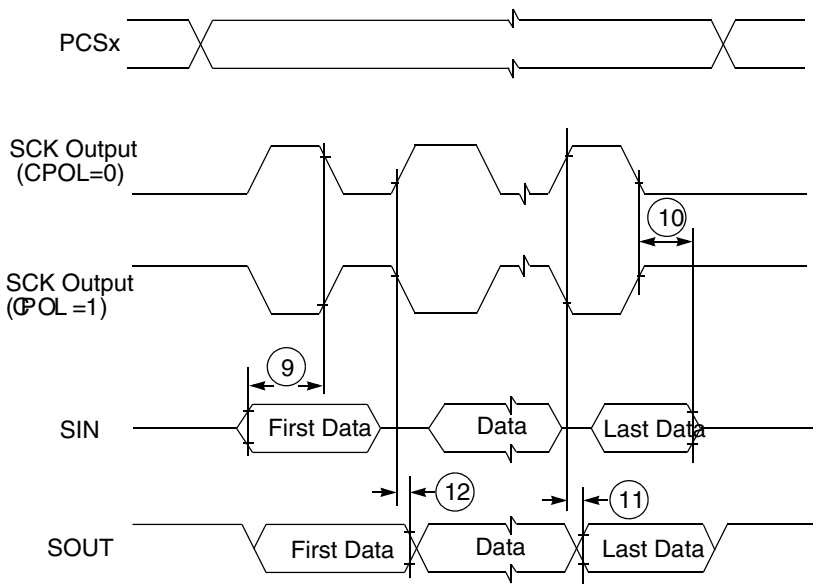

Figure 17. DSPI classic SPI timing — master, CPHA = 1

Downloaded from Arrow.com.

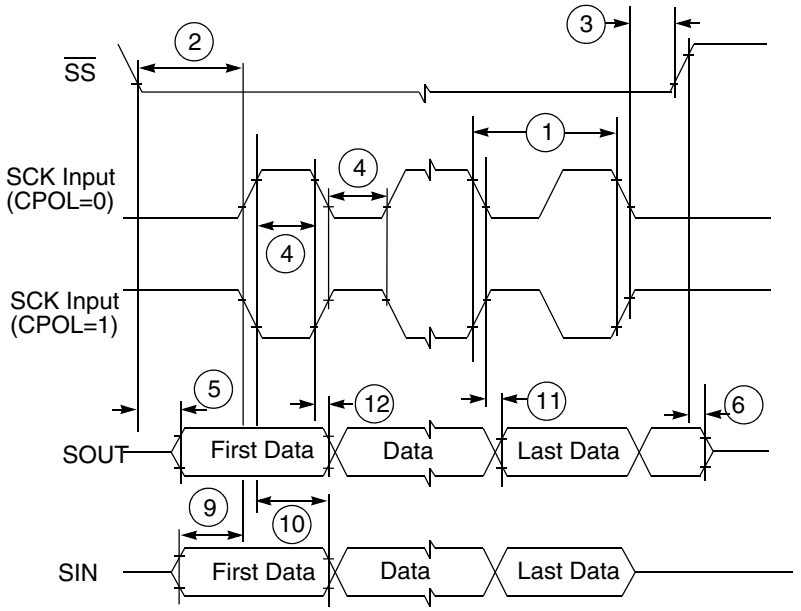

Figure 18. DSPI classic SPI timing — slave, CPHA = 0

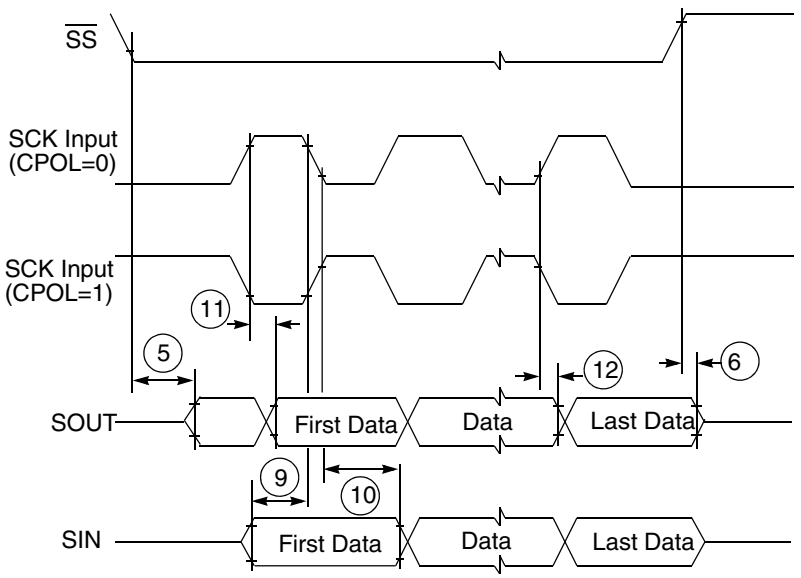

Figure 19. DSPI classic SPI timing — slave, CPHA = 1

Downloaded from Arrow.com.

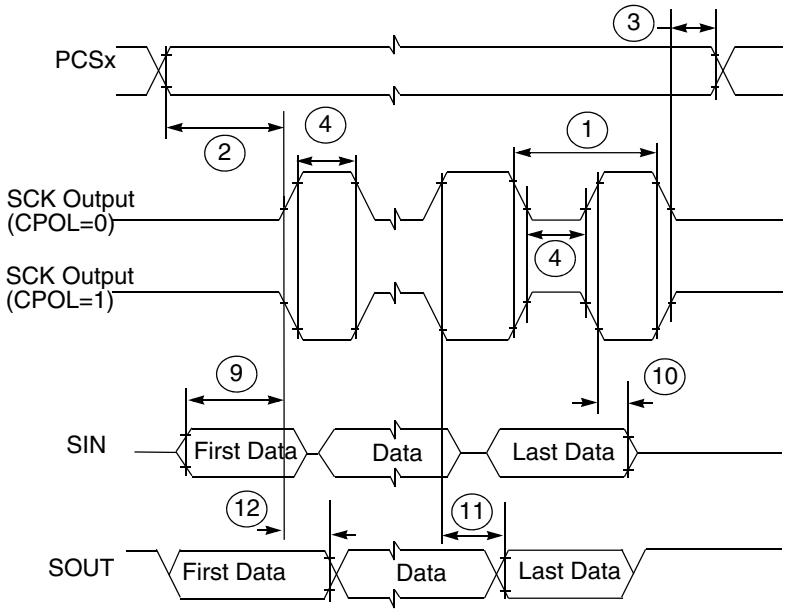

Figure 20. DSPI modified transfer format timing — master, CPHA = 0

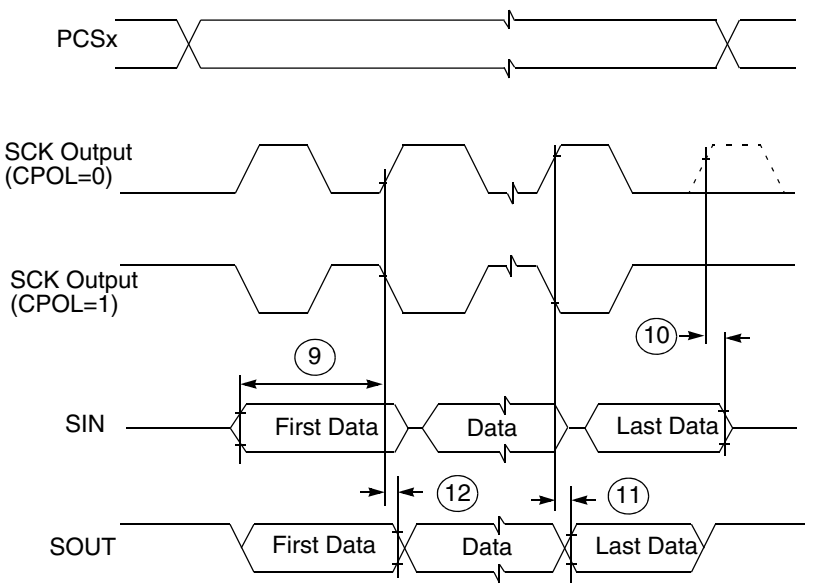

Figure 21. DSPI modified transfer format timing — master, CPHA = 1

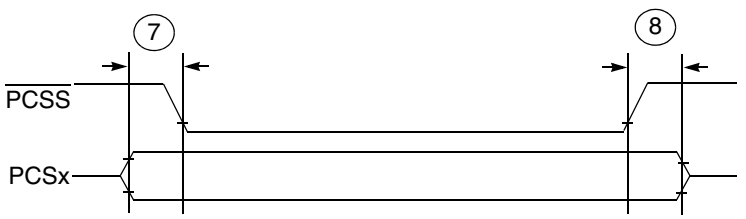

Figure 22. DSPI PCS strobe ($\overline{\text{PCSS}}$) timing

Downloaded from Arrow.com.

6.5.2 Ultra High Speed SD/SDIO/MMC Host Interface (uSDHC) AC timing

Measurements are with a load of 40 pF on output pins. Input slew = 1 ns, DSE[2:0] = 101, and FSEL[1:0] = 11. uSDHC_VEND_SPEC[CMD_OE_PRE_EN] field should be programmed to 1 for proper functioning of uSDHC external interface.

6.5.2.1 SDR mode timing specifications

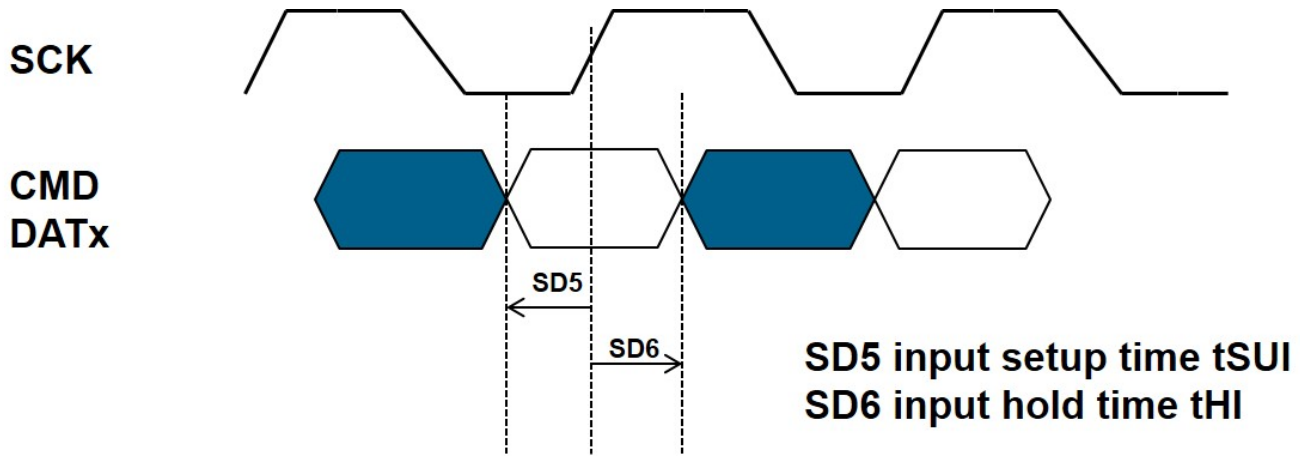

Figure 23. SDR CMD-DATx Read Timing

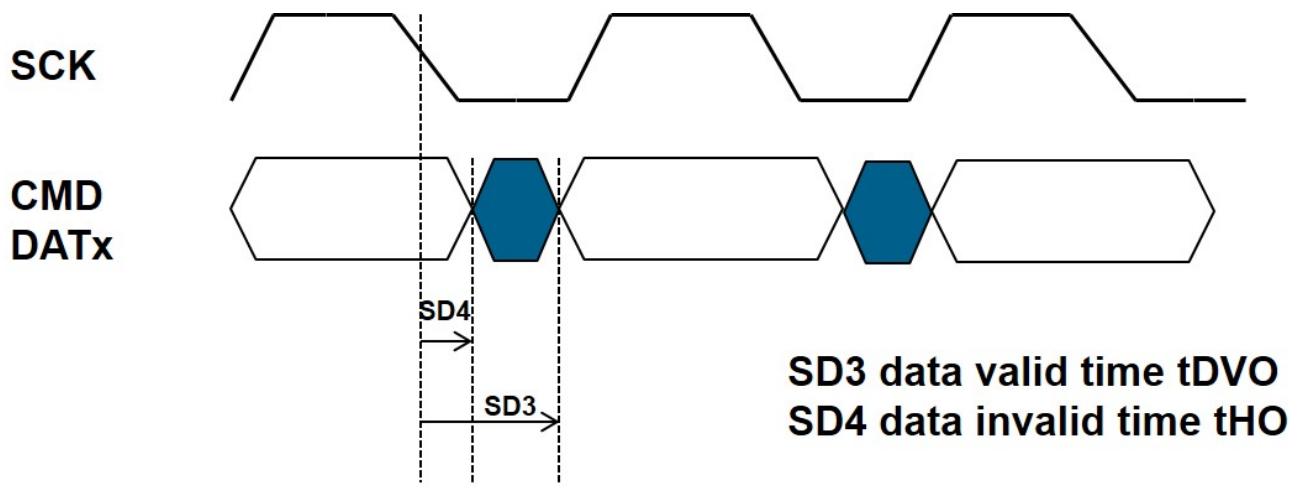

Figure 24. SDR CMD-DATx Write Timing

Table 37. SDR mode timing specification

ID	Parameter	Symbols	Min	Max	Unit
Card Input Clock					

Table continues on the next page...

Downloaded from Arrow.com.

Table 37. SDR mode timing specification (continued)

ID	Parameter	Symbols	Min	Max	Unit
SD1	Clock Frequency (Low Speed)	f_{PP}[1]	0	400	kHz
	Clock Frequency (SD/ SDIO Full Speed/High Speed)	f_{PP}[2]	0	25/50	MHz
	Clock Frequency (MMC Full Speed/High Speed)	f_{PP}[3]	0	20/52	MHz
	Clock Frequency (Identification Mode)	f_{OD}	100	400	kHz
SD2	Clock Duty Cycle	t_{DC}	45	55	%
eSDHC Output/Card Inputs CMD, DAT (Reference to CLK)					
SD3	CLK to Data/CMD Valid	t_{DVO}	—	3.2	ns
SD4	CLK to Data/CMD Invalid	t_{HO}	-6.3	—	ns
eSDHC Input/Card Outputs CMD, DAT (Reference to CLK)					
SD5	DATA/CMD Input Setup time	t_{SUI}	4.5	—	ns
SD6	DATA/CMD Input Hold time	t_{HI}	0	—	ns

1. In low speed mode, card clock must be lower than 400 kHz, voltage ranges from 2.7 to 3.6 V.
2. In normal (full) speed mode for SD/SDIO card, clock frequency can be any value between 0–25 MHz. In high-speed mode, clock frequency can be any value between 0–50 MHz.
3. In normal (full) speed mode for MMC card, clock frequency can be any value between 0–20 MHz. In high-speed mode, clock frequency can be any value between 0–52 MHz.

6.5.2.2 DDR mode timing specifications

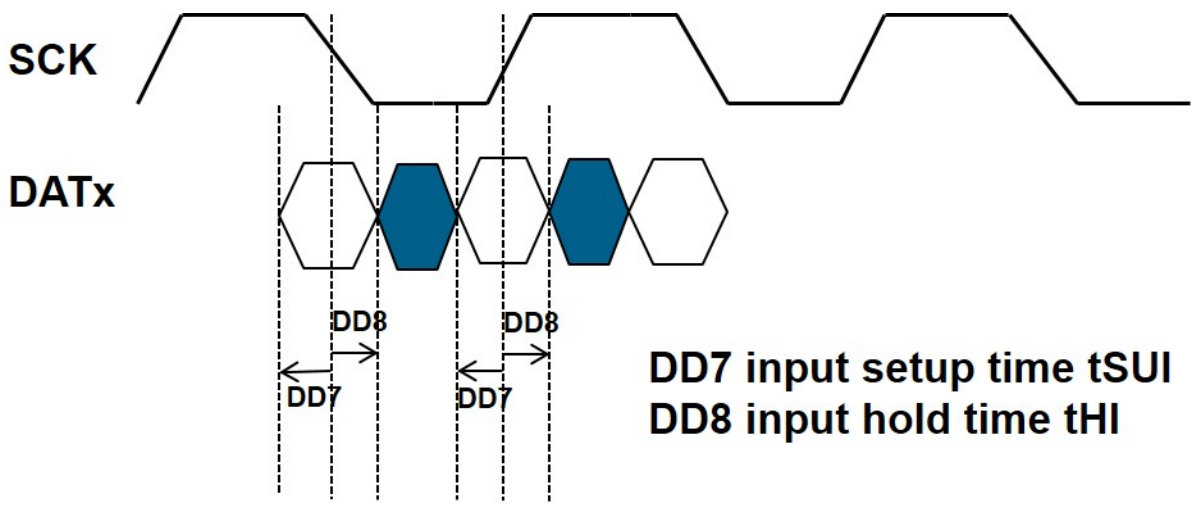

Figure 25. DDR Data Read timing

Downloaded from Arrow.com.

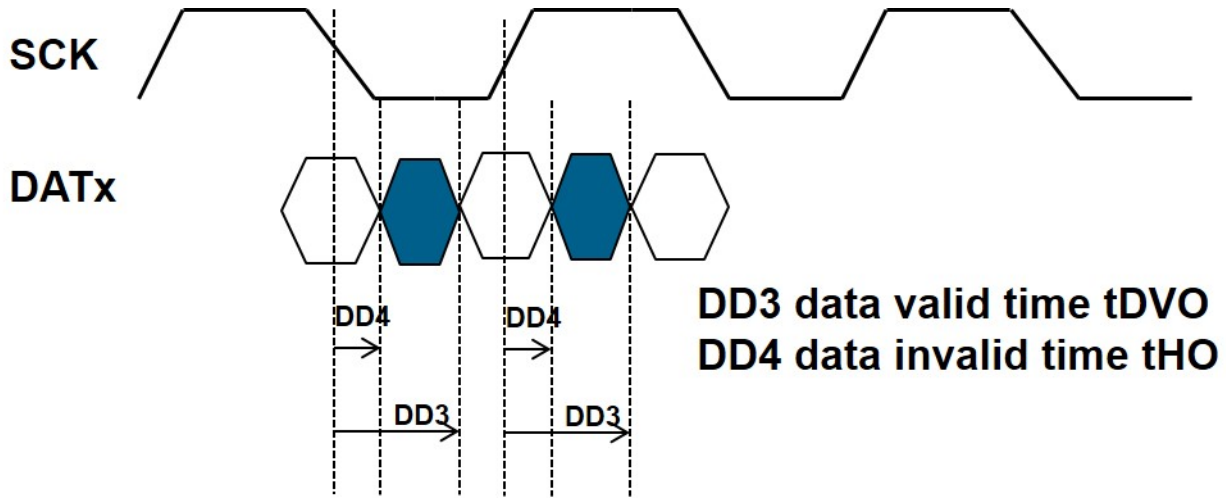

Figure 26. DDR DATA Write timing

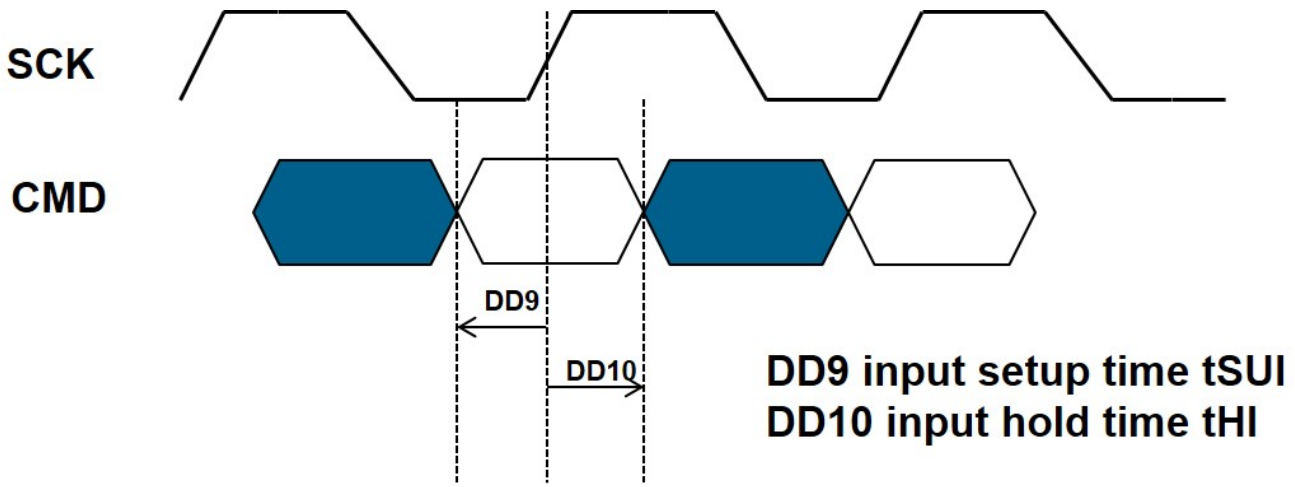

Figure 27. DDR CMD Read Timing

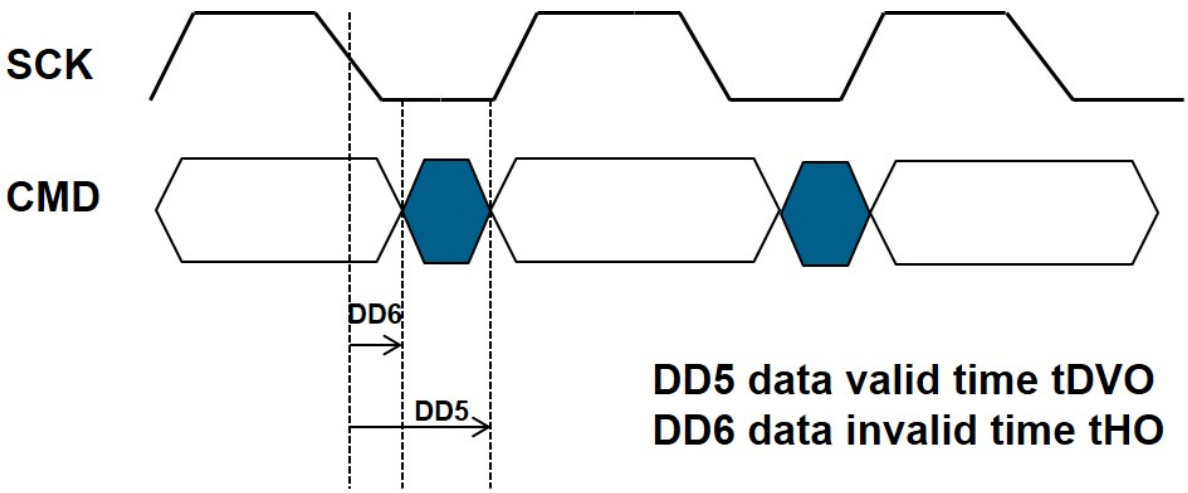

Figure 28. DDR CMD Write Timing

Downloaded from Arrow.com.

Table 38. DDR mode timing specification

ID	Parameter	Symbols	Min	Max	Unit
Card Input Clock					
DD1	Clock Frequency (eMMC4.4 DDR)	f_{PP}	0	52	MHz
DD1	Clock Frequency (SD3.0 DDR)	f_{PP}	0	50	MHz
DD2	Clock Duty Cycle	t_{DC}	45	55	%
uSDHC Output/Card Inputs CMD, DAT (Reference to CLK)					
DD3	CLK to Data Valid	t_{DVO}	—	6.2	ns
DD4	CLK to Data Invalid	t_{HO}	2.5	—	ns
DD5	CLK to CMD Valid	t_{DVO}	—	3.25	ns
DD6	CLK to CMD Invalid	t_{HO}	–6.2	—	ns
uSDHC Input/Card Outputs CMD, DAT (Reference to CLK)					
DD7	Data Input Setup Time	t_{SUI}	2.3	—	ns
DD8	Data Input Hold Time	t_{HI}	1.5	—	ns
DD9	CMD Input Setup Time	t_{SUI}	4.5	—	ns
DD10	CMD Input Hold Time	t_{HI}	0	—	ns

Downloaded from Arrow.com.

6.5.3 LFAST electrical characteristics

6.5.3.1 LFAST interface timing diagrams

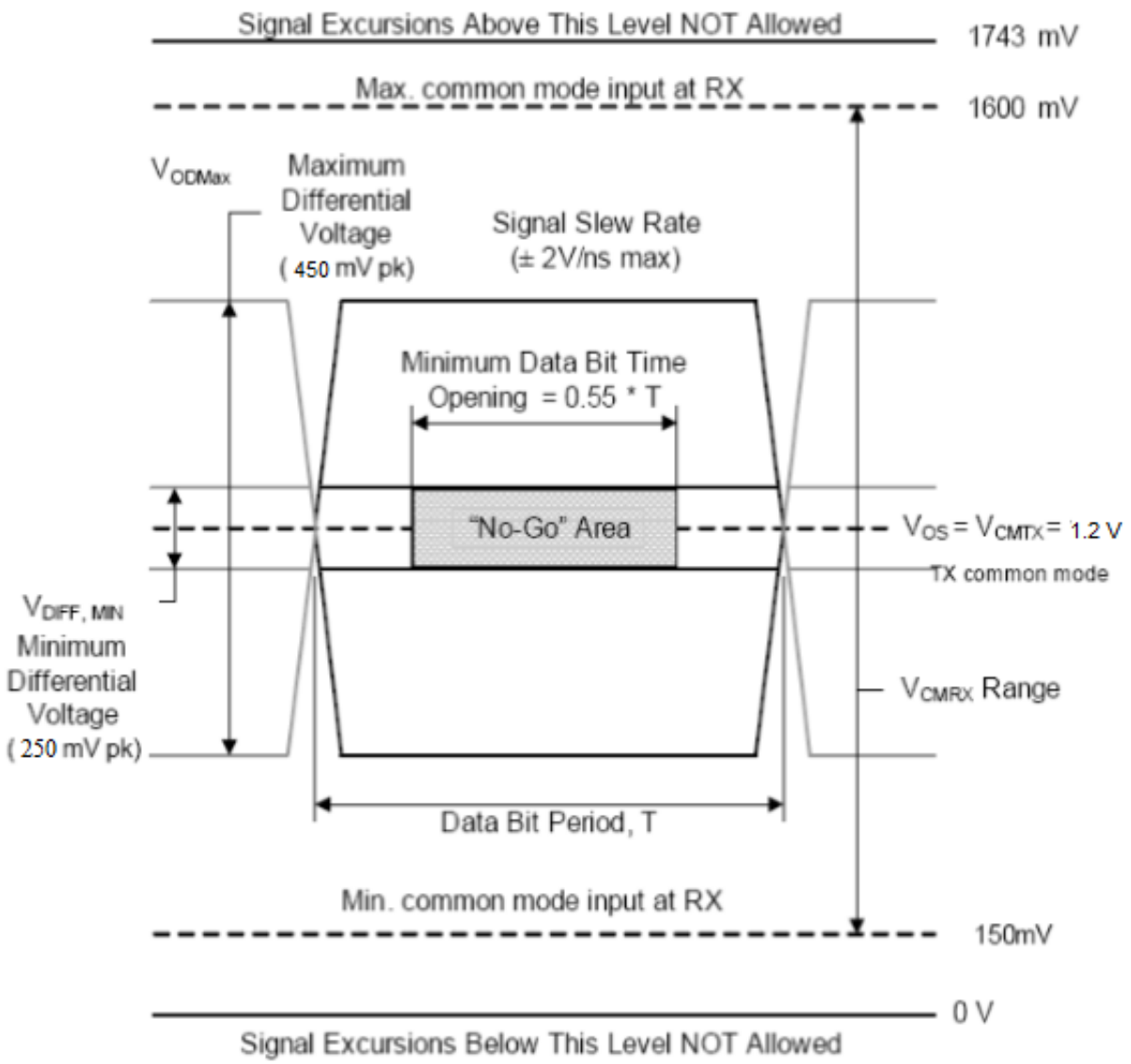

Figure 29. LFAST timing definition

Downloaded from Arrow.com.

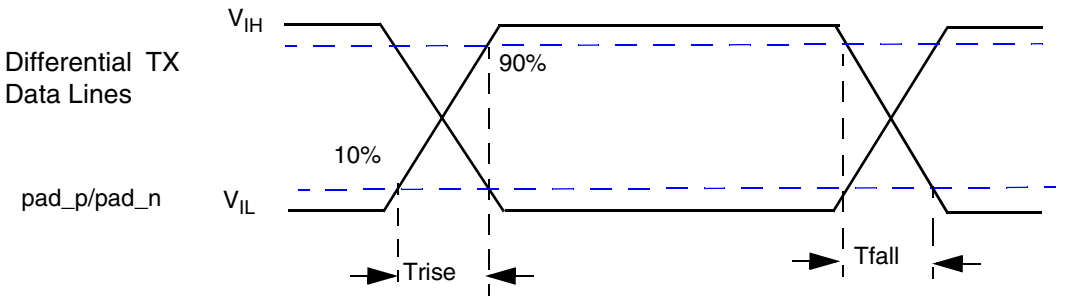

Figure 30. Rise/fall time

6.5.3.2 LFAST Interface electrical characteristics

Table 39. LFAST electrical characteristics

Symbol	Parameter	Conditions	Value[1]			Unit
			Min	Typ	Max	
V_{DDIO_LFAST}	Operating supply conditions	—	1.71	—	1.95	V
Data Rate						
DATARATE	Data rate	—	—	312/320	Typ+0.1%	Mbps
STARTUP						
T_{STRT_BIAS}	Bias startup time[2]	—	—	0.5	3	µs
TRANSMITTER						
V_{OS_DRF}	Common mode voltage	—	1.1	1.2	1.475	V
$\lvert\Delta_{VOD_DRF}\rvert$	Differential output voltage swing (terminated)	—	250	350	450	mV
T_{TR_DRF}	Rise/Fall time (20% - 80% of swing)[3]	—	0.1	—	0.73	ns
C_{OUT_DRF}	Capacitance[4]	—	—	—	5	pF
RECEIVER						
V_{ICOM_DRF}	Common mode voltage	—	0.15[5]	—	1.5[6]	V
$\lvert\Delta_{VI_DRF}\rvert$	Differential input voltage	—	150	—	—	mV
R_{IN_DRF}	Terminating resistance	—	80	100	150	Ω
C_{IN_DRF}	Capacitance[7]	—	—	3.5	6	pF
L_{IN_DRF}	Parasitic Inductance[8]	—	—	5	10	nH
LFAST Clock characteristics						
F_{RF_REF}	SysClk Frequency	—	10	—	26	MHz
ERR_{REF}	SysClk Frequency Error	—	-1	—	1	%
DC_{REF}	SysClk Duty Cycle	—	45	—	55	%

1. All values need to be confirmed during device characterization.
2. Startup time is defined as the time taken by LFAST current reference block for settling bias current after its pwr_down (power down) has been deasserted. LFAST functionality is guaranteed only after the startup time.
3. Rise/fall time is defined for 20 to 80% signal voltage levels, at 2pF Cload and 100 Ohm termination resistor load.
4. Total lumped capacitance including silicon, package pin and bond wire. Application board simulation needed to verify LFAST template compliancy.
5. Absolute min = 0.15 V - (250 mV/2) = 0.025 V
6. Absolute max = 1.5 V + (450 mV/2) = 1.725 V

Downloaded from Arrow.com.

7. Total capacitance including silicon, package pin and bond wire
8. Total inductance including silicon, package pin and bond wire

6.5.4 FlexRay

6.5.4.1 FlexRay timing parameters

This section provides the FlexRay interface timing characteristics for the input and output signals. These numbers are recommended per the FlexRay Electrical Physical Layer Specification, Version 3.0.1, and subject to change per the final timing analysis of the device.

6.5.4.2 TxEN

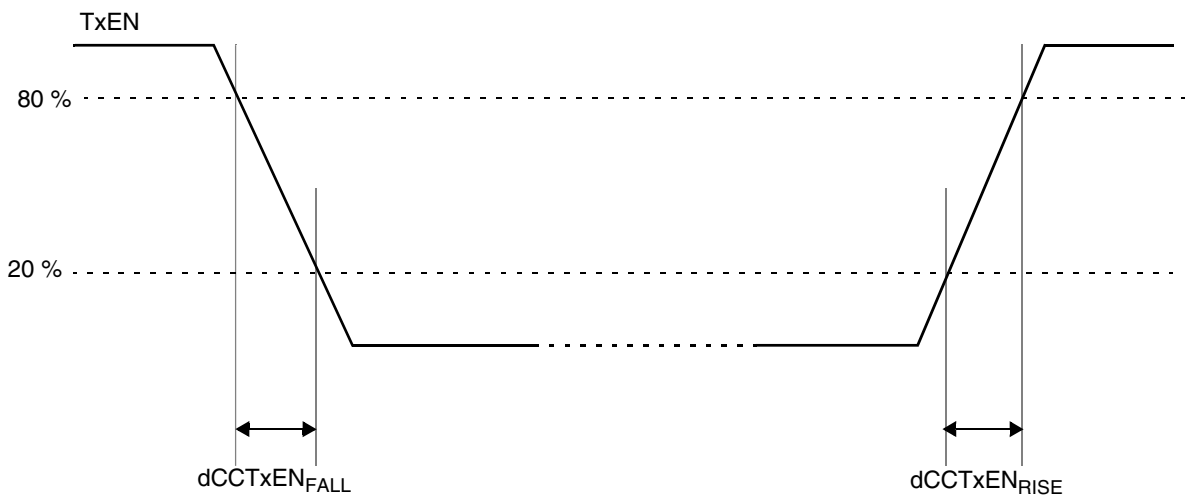

Figure 31. TxEN signal

Table 40. TxEN output characteristics[1]

Name	Description	Min	Max	Unit
$dCCTxEN_{RISE25}$	Rise time of TxEN signal at CC	-	9	ns
$dCCTxEN_{FALL25}$	Fall time of TxEN signal at CC	-	9	ns
$dCCTxEN_{01}$	Sum of delay between Clk to Q of the last FF and the final output buffer, rising edge	-	25	ns
$dCCTxEN_{10}$	Sum of delay between Clk to Q of the last FF and the final output buffer, falling edge	-	25	ns

1. TxEN pin load maximum 25 pF.

Downloaded from Arrow.com.

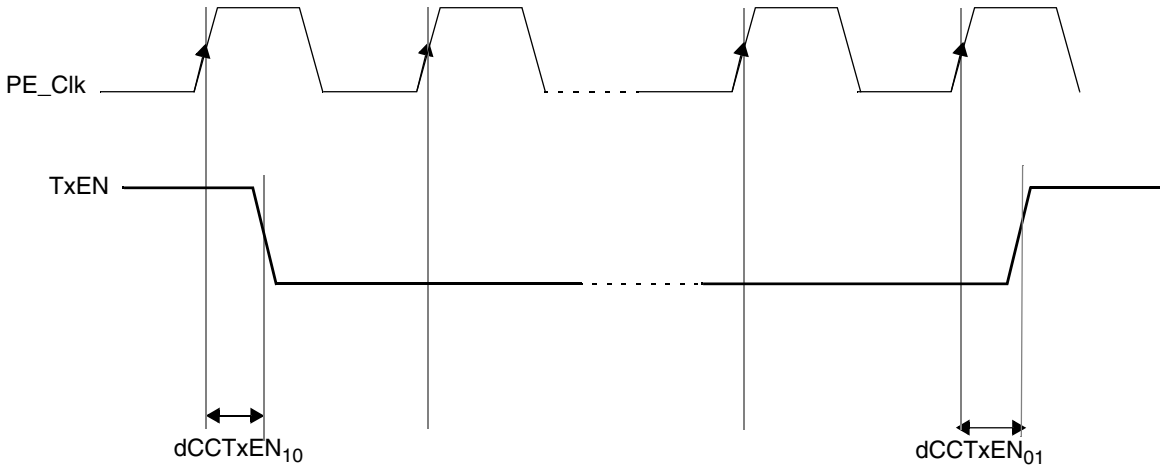

Figure 32. TxEN signal propagation delays

6.5.4.3 TxD

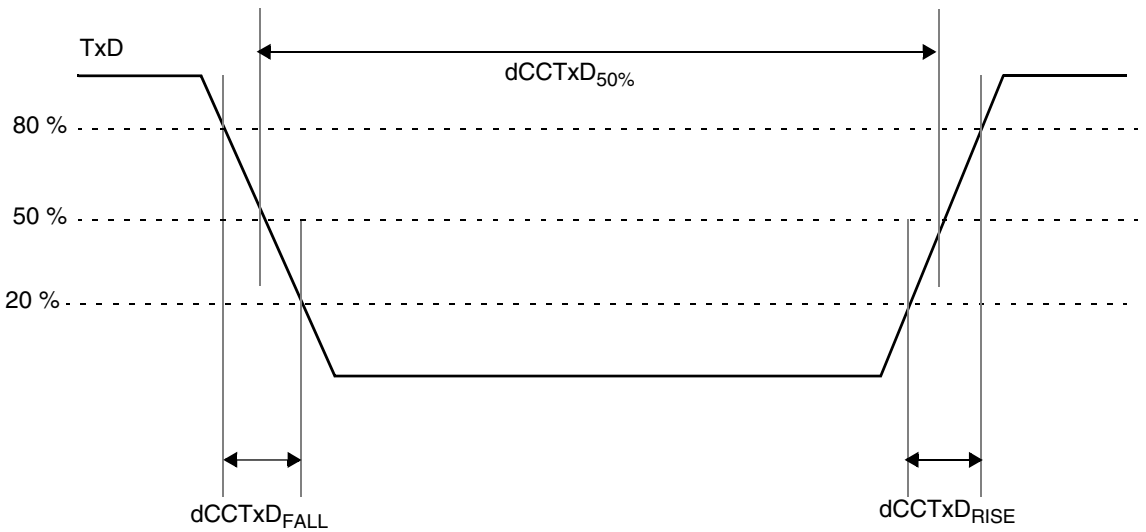

Figure 33. TxD signal

Table 41. TxD output characteristics

Name	Description[1]	Min	Max	Unit
dCCTxAsym	Asymmetry of sending CC @ 25 pF load (=$dCCTxD_{50\%}$ - 100 ns)	-2.45	2.45	ns
$dCCTxD_{RISE25}$+$dCCTxD_{FALL25}$	Sum of Rise and Fall time of TxD signal at the output	-	9	ns

Table continues on the next page...

Downloaded from Arrow.com.

Table 41. TxD output characteristics (continued)

Name	Description[1]	Min	Max	Unit
$dCCTxD_{01}$	Sum of delay between Clk to Q of the last FF and the final output buffer, rising edge	-	25	ns
$dCCTxD_{10}$	Sum of delay between Clk to Q of the last FF and the final output buffer, falling edge	-	25	ns

1. TxD pin load maximum 25 pF.

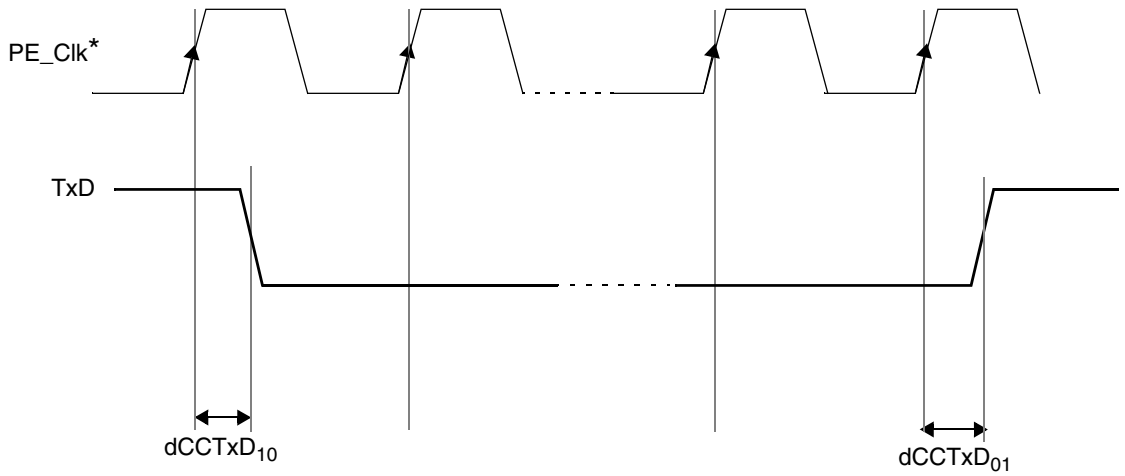

*FlexRay Protocol Engine Clock

Figure 34. TxD signal propagation delays

6.5.4.4 RxD

Table 42. RxD input characteristics

Name	Description	Min	Max	Unit
C_CCRxD	Input capacitance on RxD pin	-	7	pF
uCCLogic_1	Threshold for detecting logic high	35	70	%
uCCLogic_0	Threshold for detecting logic low	30	65	%
$dCCRxD_{01}$	Sum of delay from actual input to the D input of the first FF, rising edge	-	10	ns
$dCCRxD_{10}$	Sum of delay from actual input to the D input of the first FF, falling edge	-	10	ns

Downloaded from Arrow.com.

6.5.5 Ethernet Controller (ENET) Parameters

6.5.5.1 Ethernet Switching Specifications

The following timing specs are defined at the chip I/O pin and must be translated appropriately to arrive at timing specs/constraints for the physical interface. For MII and RMII mode, output load is equal to 25 pF and pad settings are DSE[2:0] = 101 and FSEL[1:0] = 11. For RGMII, output load is 5 pF and pad settings are DSE[2:0] = 111 and FSEL[1:0] = 11.

6.5.5.2 Receive and Transmit signal timing specifications for RMII interfaces

This section provides timing specifications that meet the requirements for RMII interfaces for a range of transceiver devices.

Table 43. Receive signal timing for RMII interfaces

Symbol	Characteristic	RMII Mode		Unit
		Min	Max	
—	EXTAL frequency (RMII input clock RMII_CLK)	—	50	MHz
E3, E7	RMII_CLK pulse width high	35%	65%	RMII_CLK period
E4, E8	RMII_CLK pulse width low	35%	65%	RMII_CLK period
E1	RXD[1:0], CVS_DV, RXER to RMII_CLK setup	4	—	ns
E2	RMII_CLK to RXD[1:0], CRS_DV, RXER hold	2	—	ns
E6	RMII_CLK to TXD[1:0], TXEN valid	—	14	ns
E5	RMII_CLK to TXD[1:0], TXEN invalid	2	—	ns

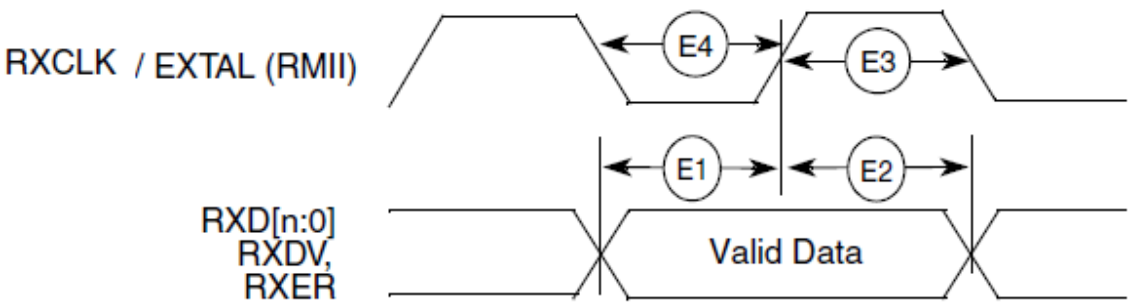

Figure 35. RMII receive signal timing diagram

Downloaded from Arrow.com.

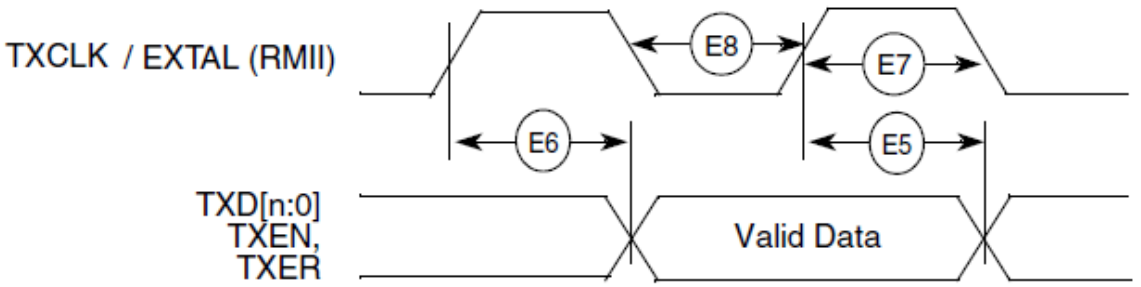

Figure 36. RMII transmit signal timing diagram

6.5.5.3 Receive and Transmit signal timing specifications for MII interfaces

This section provides timing specifications that meet the requirements for MII interfaces for a range of transceiver devices.

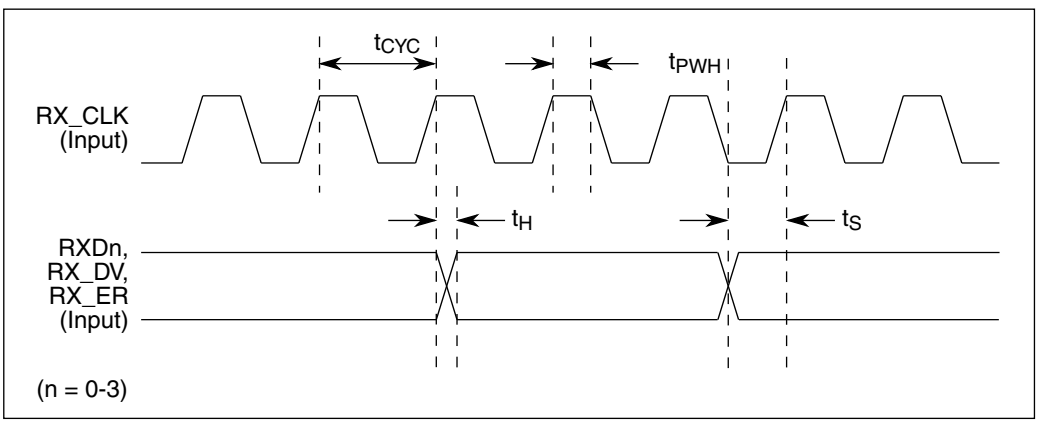

Figure 37. MII receive signal timing diagram

Table 44. Receive signal timing for MII interfaces

Characteristic	Symbol	MII Mode			Unit
		Min	Typ	Max	
RX_CLK clock period (100/10 MBPS)	t_{CYC}	-	40/400	-	ns
RX_CLK duty cycle, t_{PWH}/t_{CYC}	-	35	50	65	%
Input setup time before RX_CLK	t_S	5	-	-	ns
Input hold time after RX_CLK	t_H	5	-	-	ns

Downloaded from Arrow.com.

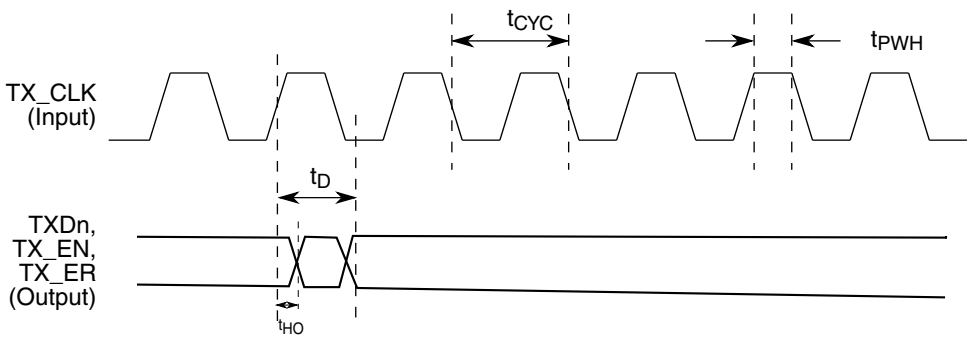

Note: Device pins applicable to MII interface are applicable to TMII interface, and operates at 50 MHz reference clock.

Figure 38. MII transmit signal timing diagram

Table 45. Transmit signal timing for MII interfaces

Characteristic	Symbol	MII Mode			Unit
		Min	Typ	Max	
TX_CLK clock period (100/10 MBPS)	t_{CYC}	-	40/400	-	ns
TX_CLK duty cycle, t_{PWH}/t_{CYC}	-	35	50	65	%
TX_CLK to Output Valid	t_D	-	-	25	ns
TX_CLK to Output Invalid	t_{HO}	2	-	-	ns

6.5.5.4 Receive and Transmit signal timing specifications for RGMII interfaces

This section provides timing specs that meet the requirements for RGMII interfaces for a range of transceiver devices.

Table 46. Receive signal timing for RGMII interfaces

Characteristic	Symbol	RGMII Mode			Unit
		Min	Typ	Max	
Clock cycle duration	T_{cyc}, [1]	7.2	—	8.8	ns
Data to clock output skew at transmitter	T_{skewT}, [2]	-500	—	500	ps
Data to clock input skew at receiver	T_{skewR} [3]	1	—	2.6	ns
Duty cycle for Gigabit	Duty_G [3]	45	—	55	%
Duty cycle for 10/100T	Duty_T [3]	40	—	60	%
Rise/fall time (20–80%)	Tr/Tf	-	—	0.75	ns

1. For 10 Mbps and 100 Mbps, T_{cyc} will scale to 400 ns ±40 ns and 40 ns ±4 ns respectively.
2. For all versions of RGMII prior to 2.0; This implies that PC board design will require clocks to be routed such that an additional delay of greater than 1.5 ns and less than 2 ns will be added to the associated clock signal. For 10/100, the max value is unspecified.
3. Duty cycle may be stretched/shrunk during speed changes or while transitioning to a received packet's clock domain as long as minimum duty cycle is not violated and stretching occurs for no more than three T_{cyc} of the lowest speed transitioned between.

Downloaded from Arrow.com.

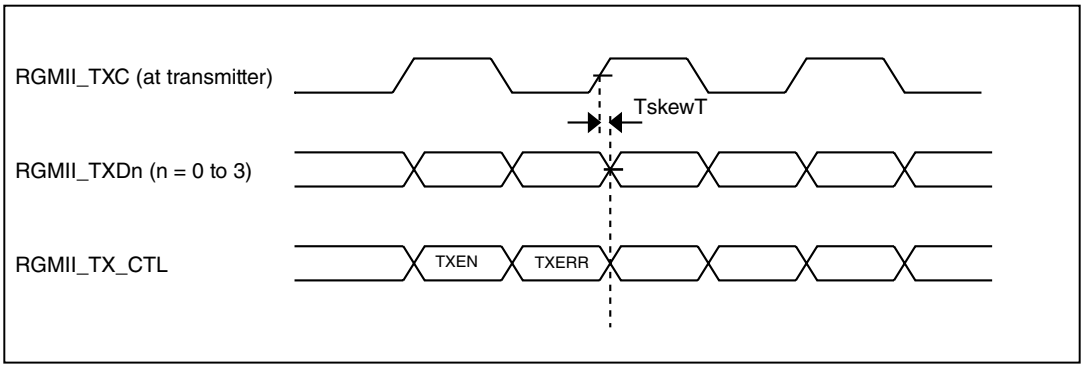

Figure 39. RGMII Transmit signal timing diagram original

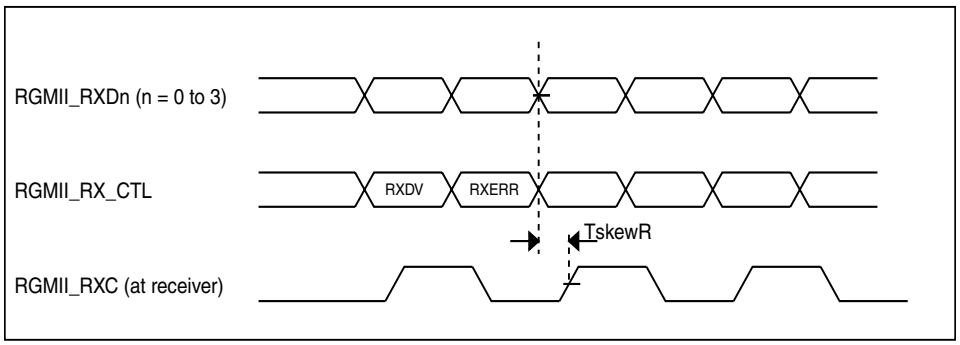

Figure 40. RGMII Receive signal timing diagram original

6.5.5.5 MII/RMII Serial Management channel timing (MDC/MDIO)

Output load is equal to 45 pF and pad settings are DSE[2:0] = 101 and FSEL[1:0] = 11. Ethernet works with maximum frequency of MDC at 2.5 MHz. ENET_MSCR [HOLDTIME] should be set to 010 when Module Clock = 133 MHz. MDIO pin must have external pull up.

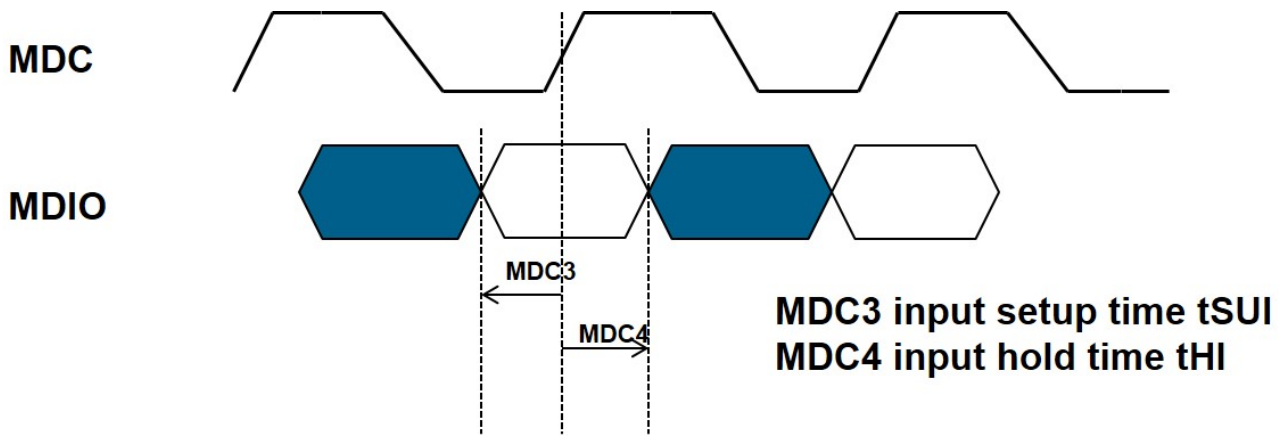

Figure 41. MDIO input timing

Downloaded from Arrow.com.

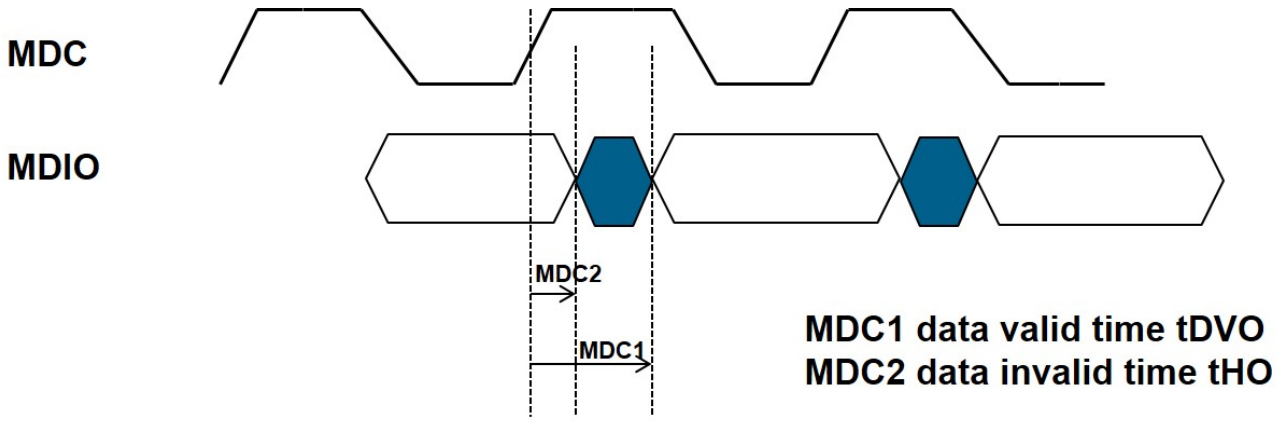

Figure 42. MDIO output timing

Table 47. MDIO interface timing specification

ID	Parameter	Symbols	Min	Max	Unit
MDCO	Clock Duty Cycle	t_{MDC}	40	60	%
MDIO Output Timing					
MDC1	MDC to MDIO Valid	t_{DVO}	—	50	ns
MDC2	MDC to MDIO Invalid	t_{HO}	10	—	ns
MDIO Input Timing					
MDC3	MDIO Input Setup time	t_{SUI}	50	—	ns
MDC4	MDIO Input Hold time	t_{HI}	0	—	ns

6.5.6 PCI Express specifications

The PCI Express link conforms to the *PCI Express Base Specification*, Revision 2.1. The following summary of Transmitter and Receiver specifications are copied directly from the Base Specification. Consult the Base Specification for additional details.

Table 48. PCI Express transmitter specifications[1]

Symbol	Parameter	2.5 GT/s	5.0 GT/s	Units
UI	Unit Interval	399.88 (min) 400.12 (max)	199.94 (min) 200.06 (max)	ps
$V_{TX\text{-}DIFF\text{-}PP}$	Differential p-p Tx voltage swing	0.8 (min) 1.2 (max)	0.8 (min) 1.2 (max)	V
$V_{TX\text{-}DE\text{-}RATIO\text{-}3.5dB}$	Tx de-emphasis level ratio	3.0 (min) 4.0 (max)	3.0 (min) 4.0 (max)	dB
$V_{TX\text{-}DE\text{-}RATIO\text{-}6dB}$	Tx de-emphasis level	N/A	5.5 (min) 6.5 (max)	dB
$T_{MIN\text{-}PULSE}$	Instantaneous lone pulse width	Not specified	0.9 (min)	UI

Table continues on the next page...

Downloaded from Arrow.com.

Table 48. PCI Express transmitter specifications[1] (continued)

$T_{TX\text{-}EYE}$	Transmitter Eye including all jitter sources	0.75 (min)	0.75 (min)	UI
$T_{TX\text{-}EYE\text{-}MEDIAN\text{-}to\text{-}MAX\text{-}JITTER}$	Maximum time between the jitter median and max deviation from the median	0.125 (max)	Not specified	UI
$T_{TX\text{-}HF\text{-}DJ\text{-}DD}$	Tx deterministic jitter > 1.5 MHz	Not specified	0.15 (max)	UI
$T_{TX\text{-}LF\text{-}RMS}$	Tx RMS jitter < 1.5 MHz	Not specified	3.0	ps RMS
$BW_{TX\text{-}PLL}$	Maximum Tx PLL bandwidth	22 (max)	16 (max)	MHz
$BW_{TX\text{-}PLL\text{-}LO\text{-}3dB}$	Minimum Tx PLL BW for 3 dB peaking	1.5 (min)	8 (min)	MHz
$BW_{TX\text{-}PLL\text{-}LO\text{-}1dB}$	Minimum Tx PLL BW for 1 dB peaking	Not specified	5 (min)	MHz
$PKG_{TX\text{-}PLL2}$	Tx PLL peaking with 5 MHz min BW	Not specified	1.0 (max)	dB

1. See Table 4-9 2.5 and 5.0 GT/s Transmitter Specifications in PCI Express Base Specification for further details.

Table 49. PCI Express receiver specifications[1]

Symbol	Parameter	2.5 GT/s	5.0 GT/s	Units
UI	Unit Interval	399.88 (min) 400.12 (max)	199.94 (min) 200.06 (max)	ps
$V_{RX\text{-}DIFF\text{-}PP\text{-}CC}$	Differential Rx peak-peak voltage for common Refclk Rx architecture	0.175 (min) 1.2 (max)	0.120 (min) 1.2 (max)	V
$T_{RX\text{-}EYE}$	Receiver eye time opening	0.40 (min)	N/A	UI
$T_{RX\text{-}TJ\text{-}CC}$	Max Rx inherent timing error	N/A	0.40 (max)	UI
$T_{RX\text{-}DJ\text{-}DD\text{-}CC}$	Max Rx inherent deterministic timing error	N/A	0.30 (max)	UI

1. See Table 4-12 2.5 and 5.0 GT/s Receiver Specifications in PCI Express Base Specification for further details.

6.5.7 IIC timing

Table 50. IIC SCL and SDA input timing specifications

Number	Symbol		Parameter	Value		Unit
				Min	Max	
1	—	D	Start condition hold time	2	—	IP bus cycle[1]

Table continues on the next page...

Downloaded from Arrow.com.

Table 50. IIC SCL and SDA input timing specifications (continued)

Number	Symbol		Parameter	Value		Unit
				Min	Max	
2	—	D	Clock low time	8	—	IP bus cycle[1]
4	—	D	Data hold time	25	—	ns
6	—	D	Clock high time	4	—	IP bus cycle[1]
7	—	D	Data setup time	250 (standard mode); 100 (fast mode)[2]	—	ns
8	—	D	Start condition setup time (for repeated start condition only)	2	—	IP bus cycle[1]
9	—	D	Stop condition setup time	2	—	IP bus cycle[1]

1. Inter Peripheral Clock is the clock at which the IIC peripheral is working in the device
2. pg_clk frequency should be greater than 5 MHz for standard mode and 20 MHz for fast mode.

Table 51. IIC SCL and SDA output timing specifications

Number	Symbol		Parameter	Value		Unit
				Min	Max	
1[1]	—	D	Start condition hold time	6	—	IP bus cycle[2]
2[1]	—	D	Clock low time	10	—	IP bus cycle[1]
3[3]	—	D	SCL/SDA rise time	—	99.6	ns
4[1]	—	D	Data hold time	7	—	IP bus cycle[1]
5[1]	—	D	SCL/SDA fall time	—	99.5	ns
6[1]	—	D	Clock high time	10	—	IP bus cycle[1]
7[1]	—	D	Data setup time	2	—	IP bus cycle[1]
8[1]	—	D	Start condition setup time (for repeated start condition only)	20	—	IP bus cycle[1]
9[1]	—	D	Stop condition setup time	11	—	IP bus cycle[1]

1. Programming IBFD (I2C bus Frequency Divider) with the maximum frequency results in the minimum output timings listed. The I2C interface is designed to scale the data transition time, moving it to the middle of the SCL low period. The actual position is affected by the prescale and division values programmed in IFDR.
2. Inter Peripheral Clock is the clock at which the I2C peripheral is working in the device.
3. Because SCL and SDA are open-drain-type outputs, which the processor can only actively drive low, the time SCL or SDA takes to reach a high level depends on external signal capacitance and pullup resistor values.

Downloaded from Arrow.com.

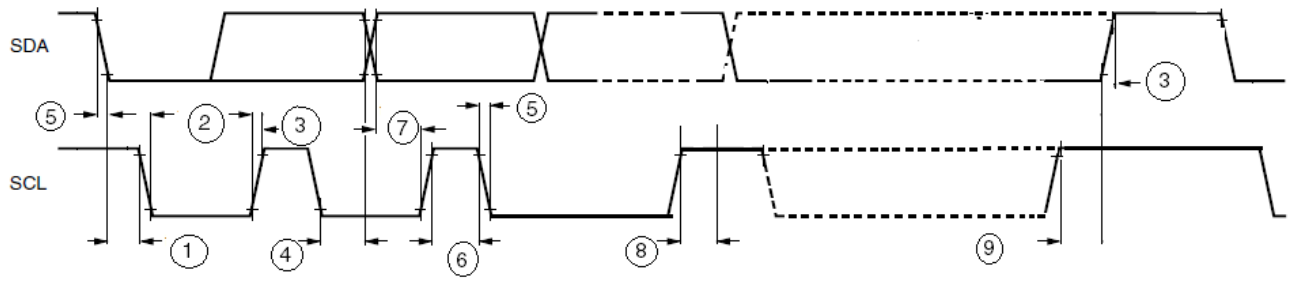

Figure 43. IIC input/output timing

6.5.8 LINFlex timing

The maximum bit rate is 1.875 MBit/s.

6.6 Display modules

6.6.1 Display Control Unit (2D-ACE) Parameters

6.6.1.1 Interface to TFT panels

This section provides the LCD interface timing for a generic active matrix color TFT panel. Measurements are with a load of 20 pF on output pins. Input slew = 1 ns, DSE[2:0] = 111, and FSEL[1:0] = 11. In the figure below[1], signals are shown with positive polarity. The sequence of events for active matrix interface timing:

- PCLK latches data into the panel on its positive edge (when positive polarity is selected). In active mode, PCLK runs continuously. This signal frequency could be from 5 to 150 MHz depending on the panel type.
- HSYNC causes the panel to start a new line. It always encompasses at least one PCLK pulse.
- VSYNC causes the panel to start a new frame. It always encompasses at least one HSYNC pulse.
- DE acts like an output enable signal to the LCD panel. This output enables the data to be shifted onto the display. When disabled, the data is invalid and the trace is off.

1. LD[23:0]" signal is "line data," an aggregation of the 2D-ACE's RGB signals—R[0:7], G[0:7] and B[0:7].

Downloaded from Arrow.com.

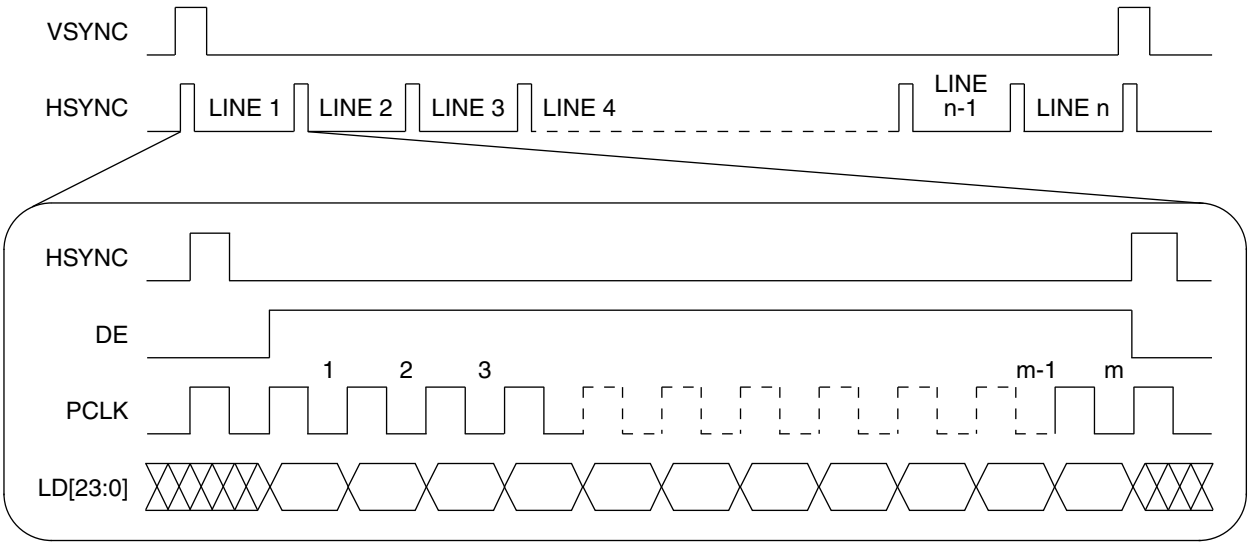

Figure 44. TFT LCD interface timing overview

6.6.1.2 Interface to TFT LCD Panels—Pixel Level Timings

This section provides the horizontal timing (timing of one line), including both the horizontal sync pulse and data. All parameters shown in the figure below are programmable. This timing diagram corresponds to positive polarity of the PCLK signal (meaning the data and sync signals change on the rising edge) and active-high polarity of the HSYNC, VSYNC and DE signals. The user can select the polarity of the HSYNC and VSYNC signals via the SYN_POL register, whether active-high or active-low. The default is active-high. The DE signal is always active-high. Pixel clock inversion and a flexible programmable pixel clock delay are also supported. They are programmed via the clock divide . The DELTA_X and DELTA_Y parameters are programmed via the DISP_SIZE register. The PW_H, BP_H and FP_H parameters are programmed via the HSYN PARA register. The PW_V, BP_V and FP_V parameters are programmed via the VSYN_PARA register.

Table 52. LCD interface timing parameters—horizontal and vertical

Symbol	Characteristic		Unit
t_{PCP}	Display pixel clock period	6.66	ns
t_{PWH}	HSYNC pulse width	PW_H * t_{PCP}	ns
t_{BPH}	HSYNC back porch width	BP_H * t_{PCP}	ns
t_{FPH}	HSYNC front porch width	FP_H * t_{PCP}	ns
t_{SW}	Screen width	DELTA_X * t_{PCP}	ns
t_{HSP}	HSYNC (line) period	(PW_H + BP_H + FP_H + DELTA_X) * t_{PCP}	ns
t_{PWV}	VSYNC pulse width	PWV * t_{HSP}	ns
t_{BPV}	VSYNC back porch width	BP_V * t_{HSP}	ns
t_{FPV}	VSYNC front porch width	FP_V * t_{HSP}	ns

Table continues on the next page...

Downloaded from Arrow.com.

Table 52. LCD interface timing parameters—horizontal and vertical (continued)

Symbol	Characteristic		Unit
t_{SH}	Screen height	DELTA_Y * t_{HSP}	ns
t_{VSP}	VSYNC (frame) period	(PW_V + BP_V + FP_V + DELTA_Y) * t_{HSP}	ns

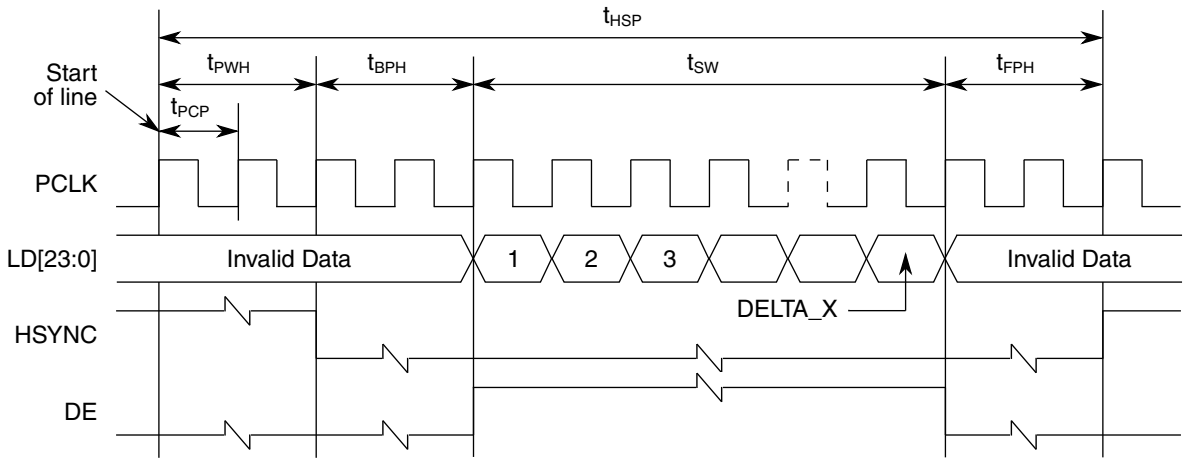

Figure 45. Horizontal sync timing

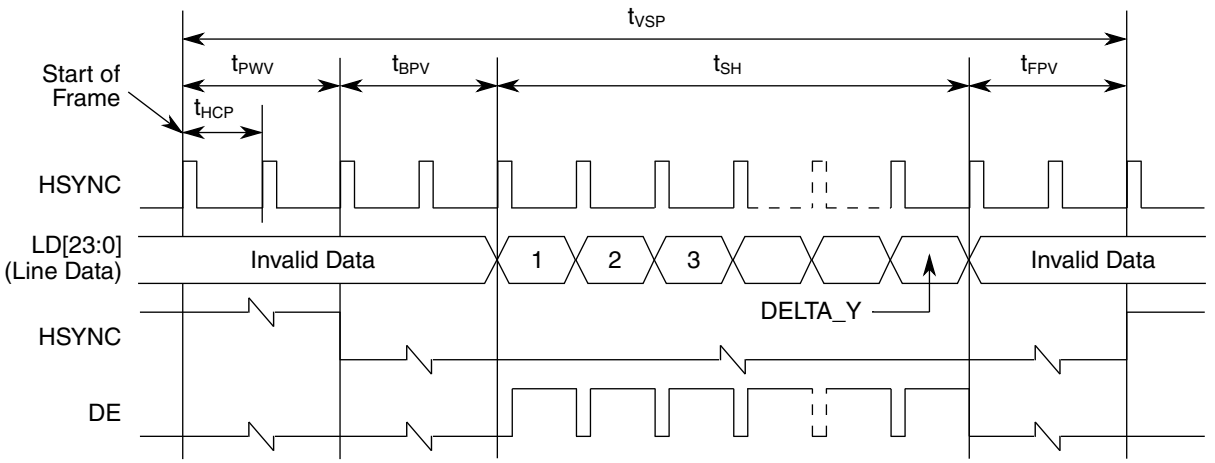

Figure 46. Vertical sync pulse

6.6.1.3 Interface to TFT LCD panels—access level

This section provides the access level timing parameters of the LCD interface.

Table 53. LCD Interface Timing Parameters—Access Level

Symbol	Description	Min	Max	Unit
t_{CKP}	Pixel Clock Period	6.66	_	ns
t^{DV}	TFT interface data valid after pixel clock	_	3	ns
t^{DV}	TFT interface HSYNC valid after pixel clock	_	3	ns

Table continues on the next page...

Downloaded from Arrow.com.

Table 53. LCD Interface Timing Parameters—Access Level (continued)

Symbol	Description	Min	Max	Unit
t^{DV}	TFT interface VSYNC valid after pixel clock	_	3	ns
t^{DV}	TFT interface DE valid after pixel clock	_	3	ns
t^{HO}	TFT interface output hold time for data and control bits	0	_	ns
	Relative skew between the data bits	_	1.5	ns

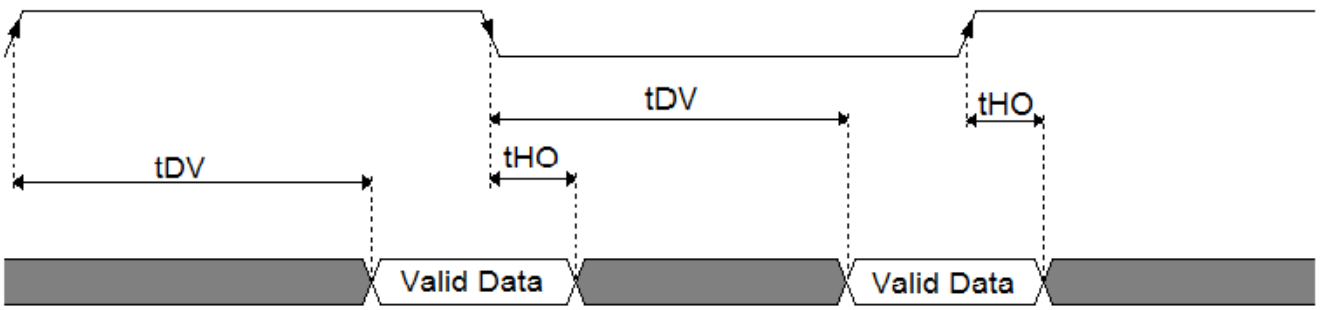

Figure 47. LCD Interface Timing Parameters—Access Level

6.6.2 Video input unit (VIU) timing specifications

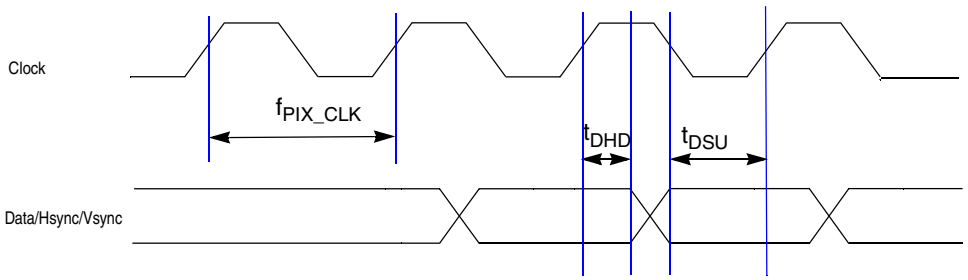

Figure 48. VIU timing diagram

Table 54. VIU timing parameters

Parameter	Description	Min	Typ	Max	Unit
f_{PIX_CK}	VIU pixel clock frequency	—	—	100	MHz
t_{DSU}	VIU Data/Hsync/ Vsync setup time	3	—	—	ns
t_{DHD}	VIU Data/Hsync/ Vsync hold time	1	—	—	ns

Downloaded from Arrow.com.

6.6.3 MIPICSI2 D-PHY electrical and timing parameters

The MIPICSI2 D-PHY[2] is compliant with MIPICSI2 version 1.0, D-PHY specification Rev. 1.01.00 (for MIPICSI2 sensor port x4 lanes)

6.6.3.1 Electrical and timing Information

Table 55. Electrical and timing Information

Symbol	Parameters	Test conditions	Min	Typ	Max	Unit
HS Line Receiver DC Specifications						
V_{IDTH}	Differential input high voltage threshold		-	-	70	mV
V_{IDTL}	Differential input low voltage threshold		-70	-	-	mV
V_{IHHS}	Single ended input high voltage		-	-	460	mV
V_{ILHS}	Single ended input low voltage		-40	-	-	mV
V_{CMRXDC}	Input common mode voltage		70	-	330	mV
$V_{TERM-EN}$	Single-ended threshold for HS termination enable		-	-	450	mV
Z_{ID}	Differential input impedance		80	-	125	ohm
LP Line Receiver DC Specifications						
V_{ILLP}	Input low voltage		-	-	550	mV
V_{IHLP}	Input high voltage		880	-	-	mV
$V_{IL-ULPS}$	Input low voltage (ultra low power state)		-	-	300	mV
V_{HYST}	Input hysteresis		25	-	-	mV

2. All rights reserved. This material is reprinted with the permission of the MIPI Alliance, Inc. No part(s) of this document may be disclosed, reproduced or used for any purpose other than as needed to support the use of the products of NXP Inc.

Downloaded from Arrow.com.

6.6.3.2 D-PHY signaling levels

The signal levels are different for differential HS mode and single-ended LP mode. The figure below shows both the HS and LP signal levels on the left and right sides, respectively. The HS signaling levels are below the LP low-level input threshold such that LP receiver always detects low on HS signals.

Table 56. D-PHY RX calibrator specifications

Symbol	Parameter	Min	Typ	Max	Unit
REXT	External reference resistor, 1% accuracy, for autocalibration	-	15	-	KΩ
T cal	Time from when PD_RX signal goes low to when CALCOMPL goes high	-	2	-	µs

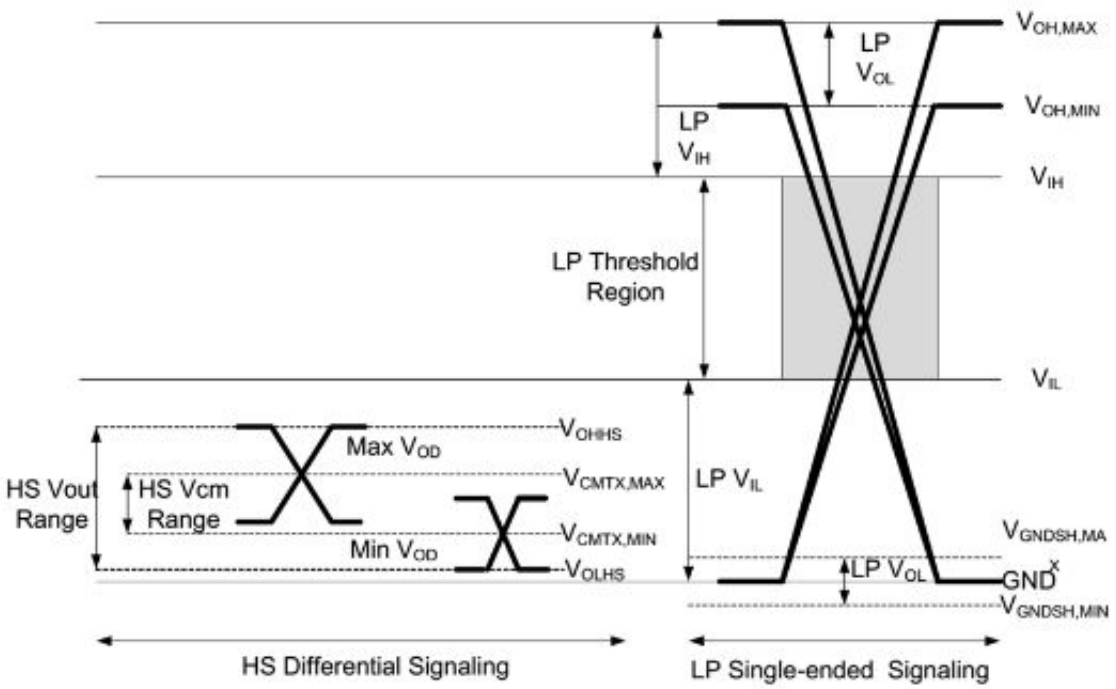

Figure 49. D-PHY signaling levels

6.6.3.3 D-PHY switching characteristics

Table 57. D-PHY switching characteristics

Symbol	Parameters	Test conditions	Min	Typ	Max	Unit
HS Line Receiver AC Specifications						

Table continues on the next page...

Downloaded from Arrow.com.

Table 57. D-PHY switching characteristics (continued)

Symbol	Parameters	Test conditions	Min	Typ	Max	Unit
-	Maximum serial data rate	On DATAP/N inputs. 80 OHM<= RL <= 125 OHM	80	-	1.5	Gbps
Δ VCMRX(HF)	Common mode interference beyond 450 MHz		-	-	100	mVpp
Δ VCMRX(LF)	Common mode interference between 50 MHz and 450 MHz		-50	-	50	mVpp
CCM	Common mode termination		-	-	60	pF
LP Line Receiver AC Specification						
eSPIKE	Input pulse rejection		-	-	300	Vps
TMIN	Minimum pulse response		20	-	-	ns
VINT	Pk-to-Pk interference voltage		-	-	200	mV
fINT	Interference frequency		450	-	-	MHz

6.6.3.4 Low-Power Receiver timing

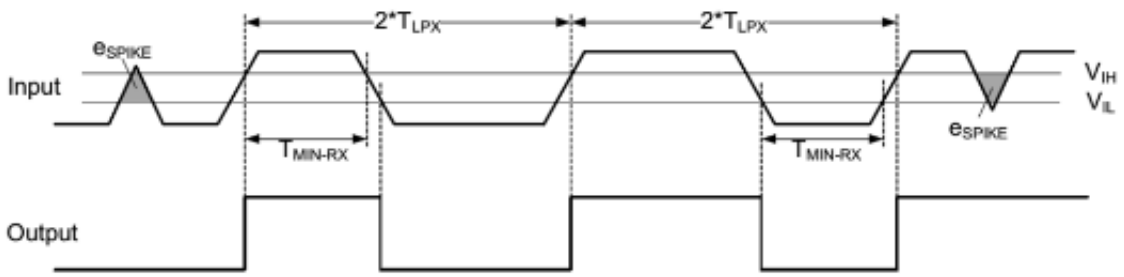

Figure 50. Input Glitch Rejection of Low-Power Receivers

Downloaded from Arrow.com.

6.6.3.5 Data to Clock timing

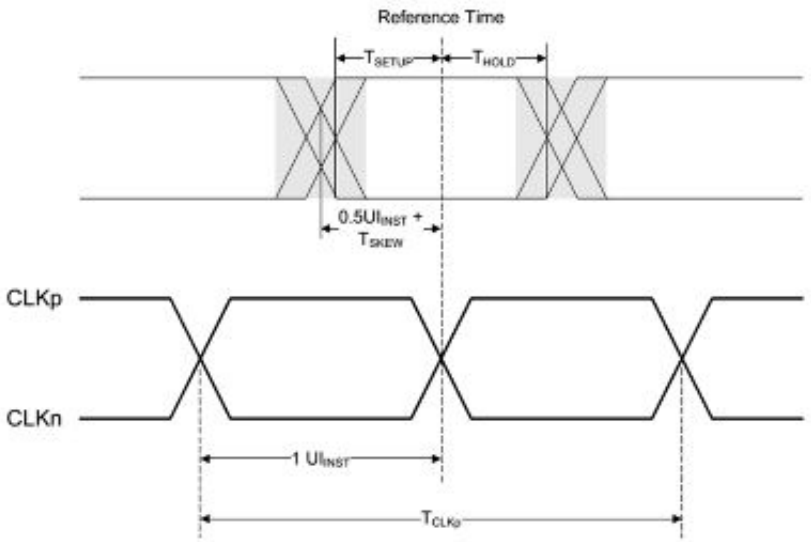

Figure 51. Data to Clock timing definition

Table 58. Data to Clock timing specifications

Symbol	Parameters	Test conditions	Min	Typ	Max	Unit
$TCLK_P$	Clock Period	—	1.33	—	25	ns
UI_{INST}	UI Instantaneuous	—	.667	—	12.5	ns
T_{SETUP}	Data to Clock Setup Time	—	0.2[1]	—	—	UI_{INST}
			0.15[2]	—	—	UI_{INST}
T_{HOLD}	Clock to Data Hold Time	—	0.2[1]	—	—	UI_{INST}
			0.15[2]	—	—	UI_{INST}

1. when D-PHY is supporting maximum data rate > 1 Gbps.
2. when D-PHY is supporting maximum data rate = 1 Gbps.

6.6.3.6 NOTICE OF DISCLAIMER

The material contained herein is not a license, either expressly or impliedly, to any IPR owned or controlled by any of the authors or developers of this material or MIPI®. The material contained herein is provided on an “AS IS” basis and to the maximum extent permitted by applicable law, this material is provided AS IS AND WITH ALL FAULTS, and the authors and developers of this material and MIPI hereby disclaim all other warranties and conditions, either express, implied or statutory, including, but not limited to, any (if any) implied warranties, duties or conditions of merchantability, of fitness for a particular purpose, of accuracy or completeness of responses, of results, of workmanlike effort, of lack of viruses, and of lack of negligence.

Downloaded from Arrow.com.

All materials contained herein are protected by copyright laws, and may not be reproduced, republished, distributed, transmitted, displayed, broadcast or otherwise exploited in any manner without the express prior written permission of MIPI Alliance. MIPI, MIPI Alliance and the dotted rainbow arch and all related trademarks, trade names, and other intellectual property are the exclusive property of MIPI Alliance and cannot be used without its express prior written permission.

ALSO, THERE IS NO WARRANTY OF CONDITION OF TITLE, QUIET ENJOYMENT, QUIET POSSESSION, CORRESPONDENCE TO DESCRIPTION OR NON-INFRINGEMENT WITH REGARD TO THIS MATERIAL OR THE CONTENTS OF THIS DOCUMENT. IN NO EVENT WILL ANY AUTHOR OR DEVELOPER OF THIS MATERIAL OR THE CONTENTS OF THIS DOCUMENT OR MIPI BE LIABLE TO ANY OTHER PARTY FOR THE COST OF PROCURING SUBSTITUTE GOODS OR SERVICES, LOST PROFITS, LOSS OF USE, LOSS OF DATA, OR ANY INCIDENTAL, CONSEQUENTIAL, DIRECT, INDIRECT, OR SPECIAL DAMAGES WHETHER UNDER CONTRACT, TORT, WARRANTY, OR OTHERWISE, ARISING IN ANY WAY OUT OF THIS OR ANY OTHER AGREEMENT, SPECIFICATION OR DOCUMENT RELATING TO THIS MATERIAL, WHETHER OR NOT SUCH PARTY HAD ADVANCE NOTICE OF THE POSSIBILITY OF SUCH DAMAGES.

Without limiting the generality of this Disclaimer stated above, the user of the contents of this Document is further notified that MIPI: (a) does not evaluate, test or verify the accuracy, soundness or credibility of the contents of this Document; (b) does not monitor or enforce compliance with the contents of this Document; and (c) does not certify, test, or in any manner investigate products or services or any claims of compliance with the contents of this Document. The use or implementation of the contents of this Document may involve or require the use of intellectual property rights ("IPR") including (but not limited to) patents, patent applications, or copyrights owned by one or more parties, whether or not Members of MIPI. MIPI does not make any search or investigation for IPR, nor does MIPI require or request the disclosure of any IPR or claims of IPR as respects the contents of this Document or otherwise.

6.7 Debug specifications

6.7.1 JTAG interface timing

Measurements are with a load of 45 pF on output pins. Input slew = 1 ns, DSE[2:0] = 101, and FSEL[1:0] = 11.

Downloaded from Arrow.com.

Table 59. JTAG pin AC electrical characteristics[1]

#	Symbol	Characteristic	Min	Max	Unit
1	t_{JCYC}	JTAG/SWD TCK Cycle Time[2]	25[3]	-	ns
		CJTAG TCK Cycle Time	50[4]	-	ns
2	t_{JDC}	TCK Clock Pulse Width	40	60	%
3	$t_{TCKRISE}$	TCK Rise and Fall Times (40% - 70%)	-	1	ns
4	t_{TMSS}, t_{TDIS}	TMS, TDI Data Setup Time	5	-	ns
5	t_{TMSH}, t_{TDIH}	TMS, TDI Data Hold Time	5	-	ns
6	t_{TDOV}	TCK Low to TDO Data Valid	-	18[5]	ns
7	t_{TDOI}	TCK Low to TDO Data Invalid	0	-	ns
8	t_{TDOHZ}	TCK Low to TDO High Impedance	-	18	ns
9	t_{JCMPPW}	JCOMP Assertion Time	100	-	ns
10	t_{JCMPS}	JCOMP Setup Time to TCK Low	40	-	ns
11	t_{BSDV}	TCK Falling Edge to Output Valid	-	600[6]	ns
12	t_{BSDVZ}	TCK Falling Edge to Output Valid out of High Impedance	-	600	ns
13	t_{BSDHZ}	TCK Falling Edge to Output High Impedance	-	600	ns
14	t_{BSDST}	Boundary Scan Input Valid to TCK Rising Edge	15	-	ns
15	t_{BSDHT}	TCK Rising Edge to Boundary Scan Input Invalid	15	-	ns

1. These specifications apply to boundary scan, JTAG and CJTAG, and serial wire debug modes.
2. This timing applies to TDI, TDO, TMS pins, however, actual frequency is limited by pad type for EXTEST instructions. Refer to pad specification for allowed transition frequency
3. Cycle time is 25 ns assuming full cycle timing. Cycle time is 50 ns assuming half cycle timing
4. Cycle time is 50 ns assuming full cycle timing. Cycle time is 100 ns assuming half cycle timing
5. Timing includes TCK pad delay, clock tree delay, logic delay and TDO output pad delay.
6. Applies to all pins, limited by pad slew rate. Refer to IO delay and transition specification and add 20 ns for JTAG delay.

Table 60. PCIe JTAG AC electrical characteristics[1]

#	Symbol	Characteristic	Min	Max	Unit
1	t_{JCYC}	TCK Cycle Time[2]	25[3]	-	ns
2	t_{JDC}	TCK Clock Pulse Width	40	60	%
3	$t_{TCKRISE}$	TCK Rise and Fall Times (40% - 70%)	-	1	ns
4	t_{TMSS}, t_{TDIS}	TMS, TDI Data Setup Time	5	-	ns
5	t_{TMSH}, t_{TDIH}	TMS, TDI Data Hold Time	5	-	ns
6	t_{TDOV}	TCK Low to TDO Data Valid	-	21[4]	ns
7	t_{TDOI}	TCK Low to TDO Data Invalid	0	-	ns
8	t_{TDOHZ}	TCK Low to TDO High Impedance	-	21	ns
9	t_{JCMPPW}	JCOMP Assertion Time	100	-	ns
10	t_{JCMPS}	JCOMP Setup Time to TCK Low	40	-	ns
11	t_{BSDV}	TCK Falling Edge to Output Valid	-	600[5]	ns
12	t_{BSDVZ}	TCK Falling Edge to Output Valid out of High Impedance	-	600	ns
13	t_{BSDHZ}	TCK Falling Edge to Output High Impedance	-	600	ns

Table continues on the next page...

Downloaded from Arrow.com.

Table 60. PCIe JTAG AC electrical characteristics[1] (continued)

#	Symbol	Characteristic	Min	Max	Unit
14	t_{BSDST}	Boundary Scan Input Valid to TCK Rising Edge	15	-	ns
15	t_{BSDHT}	TCK Rising Edge to Boundary Scan Input Invalid	15	-	ns

1. These specifications apply to boundary scan, JTAG and CJTAG, and serial wire debug modes.
2. This timing applies to TDI, TDO, TMS pins, however, actual frequency is limited by pad type for EXTEST instructions. Refer to pad specification for allowed transition frequency
3. Cycle time is 25 ns assuming full cycle timing. Cycle time is 50 ns assuming half cycle timing.
4. Timing includes TCK pad delay, clock tree delay, logic delay and TDO output pad delay.
5. Applies to all pins, limited by pad slew rate. Refer to IO delay and transition specification and add 20 ns for JTAG delay.

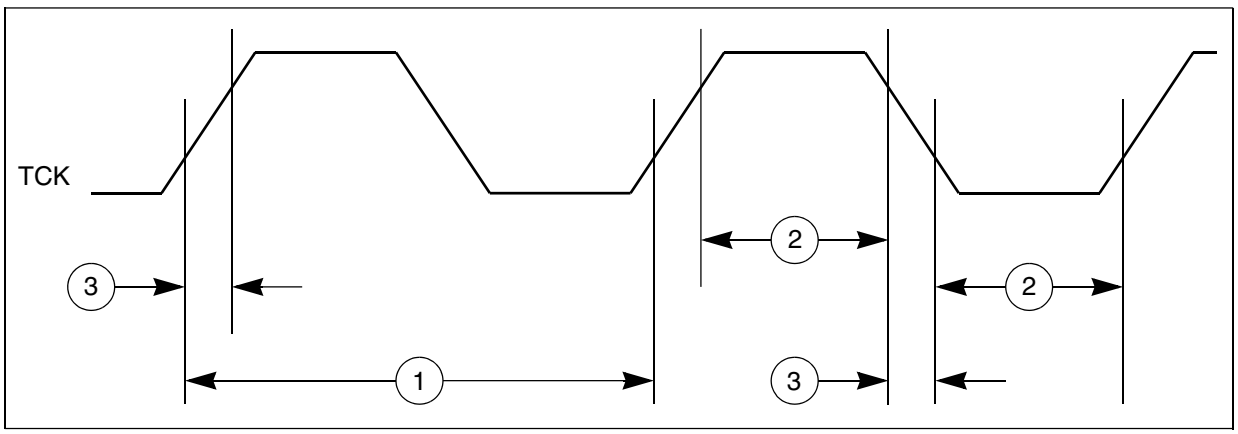

Figure 52. JTAG test clock input timing

Downloaded from Arrow.com.

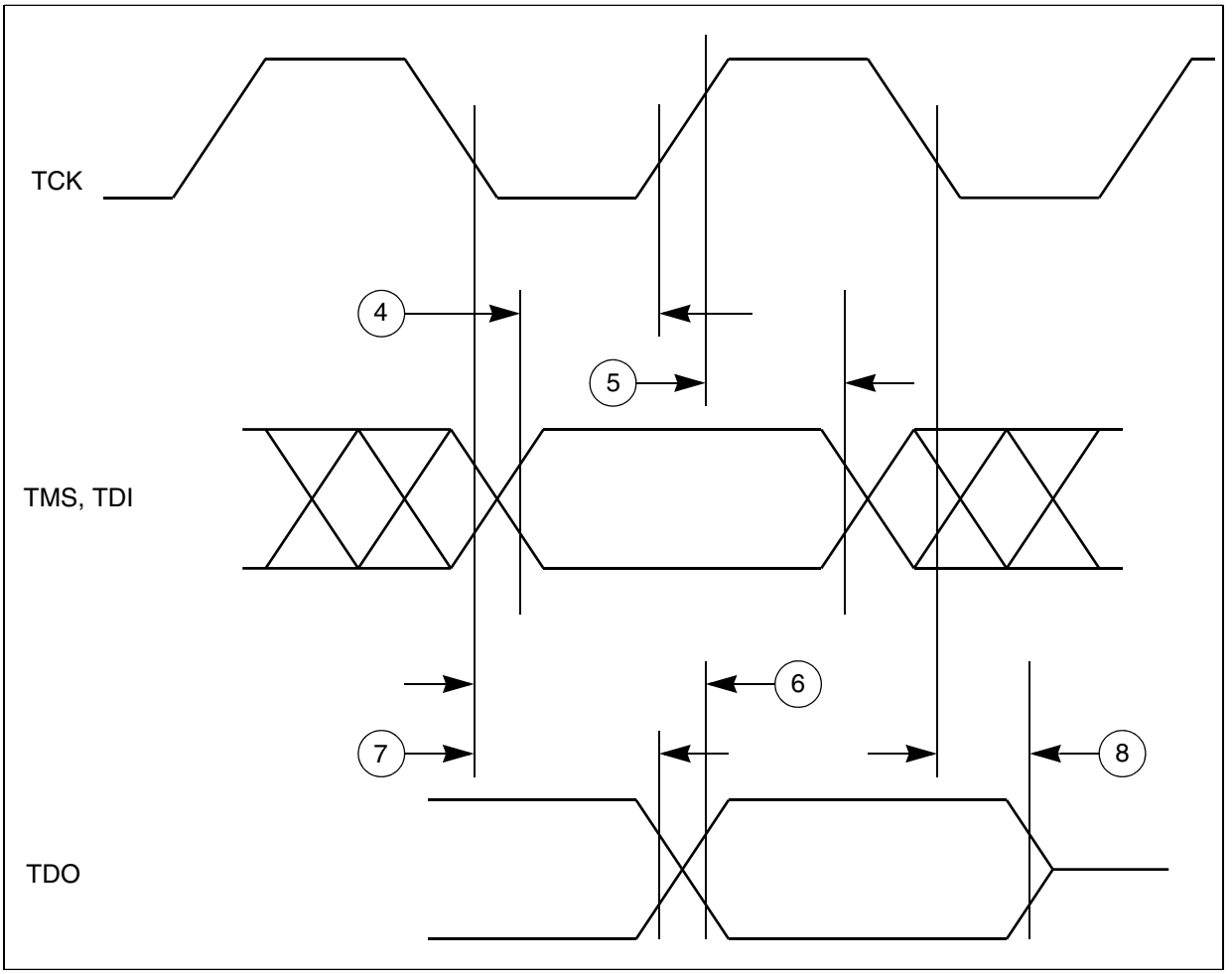

Figure 53. JTAG test access port timing

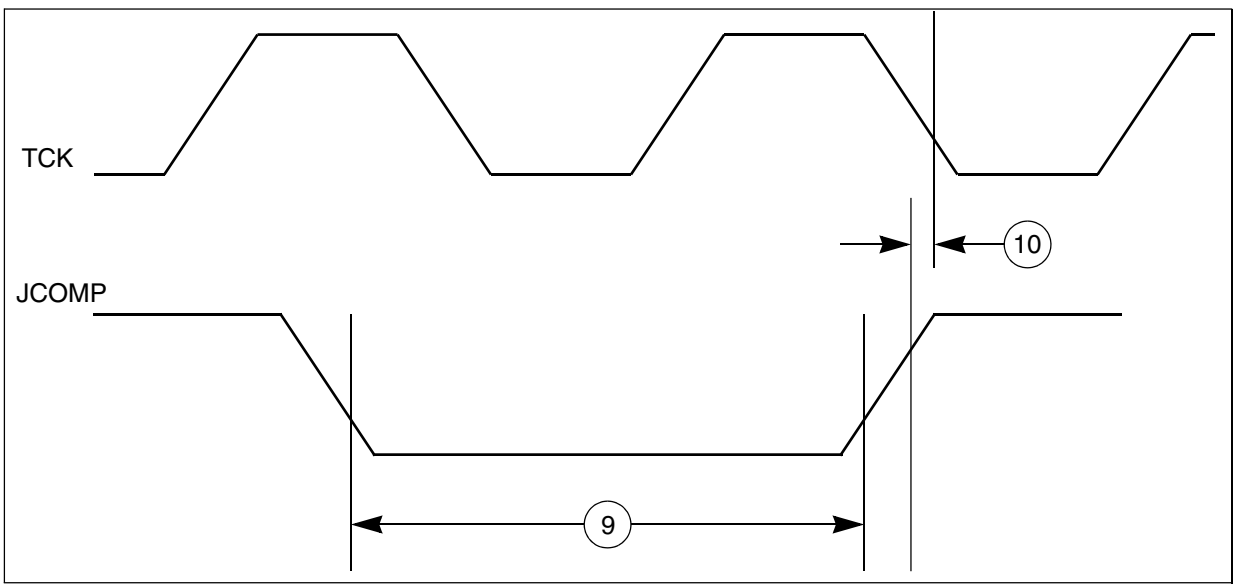

Figure 54. JTAG JCOMP timing

Downloaded from Arrow.com.

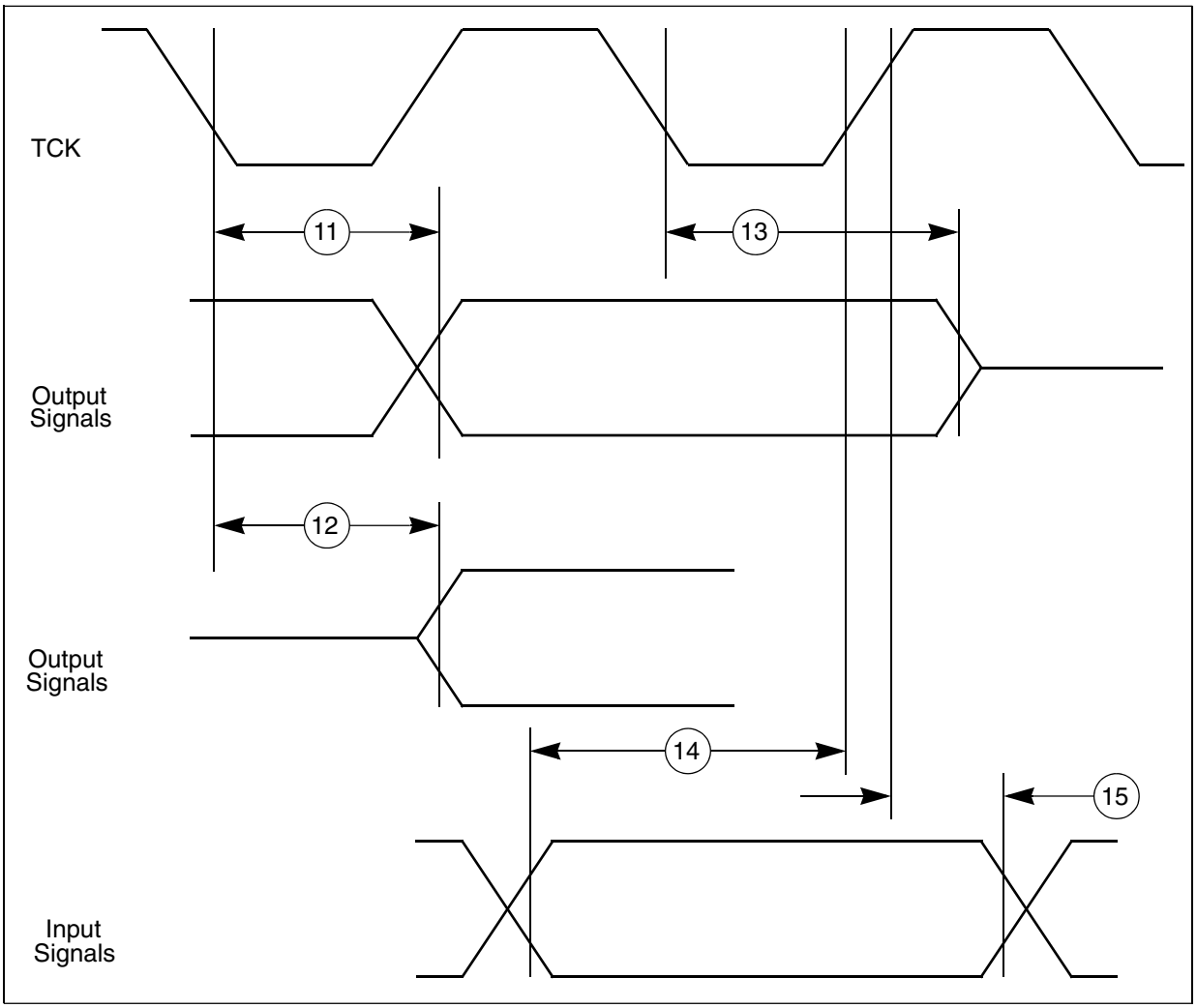

Figure 55. JTAG boundary scan timing

6.7.2 Debug trace timing specifications

Measurements are with a load of 20 pF on output pins. Input slew = 1 ns, DSE[2:0] = 111, and FSEL[1:0] = 11

Table 61. Debug trace operating behaviors

Symbol	Description	Min.	Max.	Typical	Unit
T_{cyc}	Clock frequency	—	150	—	MHz
T_{wl}	Low pulse width	2.8	—	2.95	ns
T_{wh}	High pulse width	2.8	—	2.95	ns
t_{DV}	Data output valid	—	2.2	1.3	ns
t_{HO}	Data output hold	0	—	0	ns

Downloaded from Arrow.com.

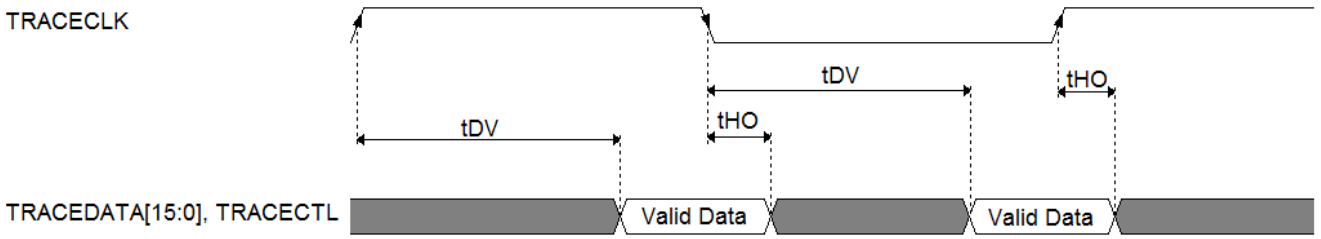

Figure 56. TRACE_CLKOUT specifications

6.8 Wakeup Unit (WKPU) AC specifications

Table 62. WKPU glitch filter specifications

Symbol	Parameter	Min	Typ	Max	Unit
W_{FNMI}	NMI pulse width that is rejected	-	-	20	ns
W_{NFNMI}	NMI pulse width that is passed	400	-	-	ns

6.9 RESET pin glitch filter specifications

Table 63. RESET pin glitch filter specifications

Symbol	Parameter	Min	Typ	Max	Unit
W_{FRESET}	RESET pulse width that is rejected	-	-	20	ns
$W_{NFRESET}$	RESET pulse width that is passed	400	-	-	ns

6.10 External interrupt timing (IRQ pin)

Table 64. External interrupt timing

No.	Symbol	Parameter	Conditions	Min	Max	Unit
1	t_{IPWL}	IRQ pulse width low	-	3	-	t_{CYC}
2	t_{IPWH}	IRQ pulse width high	-	3	-	t_{CYC}
3	t_{ICYC}	IRQ edge to edge time[1]	-	6	-	t_{CYC}

1. Applies when IRQ pins are configured for rising edge or falling edge events, but not both.

Downloaded from Arrow.com.

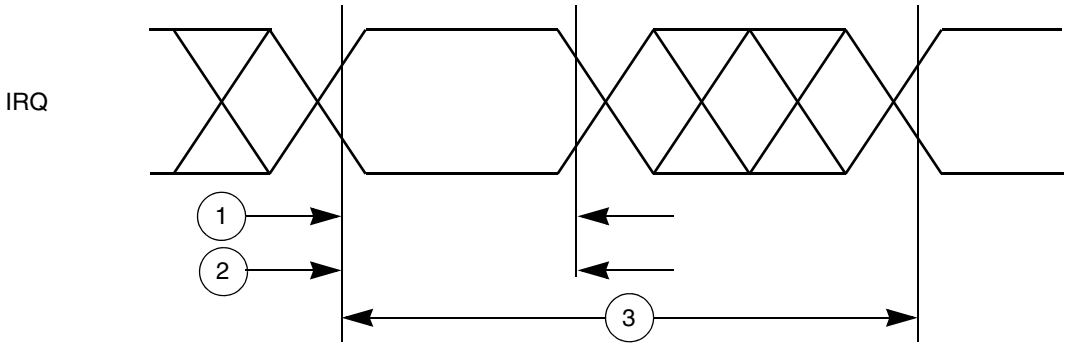

Figure 57. External interrupt timing

7 Thermal attributes

7.1 Thermal attributes

Table 65. Thermal Resistance Data

Symbol	Parameter	Conditions	Estimates (w/ Lid)	Unit
$R_{\theta JA}$	Junction to Ambient Natural Convection[1]	Single layer board (1s)	29	°C/W
$R_{\theta JA}$	Junction to Ambient Natural Convection[1]	Four layer board (2s2p)	18	°C/W
$R_{\theta JMA}$	Junction to Ambient (@200 ft/min)[1]	Single layer board (1s)	20	°C/W
$R_{\theta JMA}$	Junction to Ambient (@200 ft/min)[1]	Four layer board (2s2p)	13	°C/W
$R_{\theta JB}$	Junction to Board[2]	Four layer board (2s2p)	6	°C/W
$R_{\theta JCtop}$	Junction to Case (Top)[2]	Four layer board (2s2p)	1	°C/W
	Junction to Lid Top[3]	Four layer board (2s2p)	0.32	°C/W

1. Junction-to-Ambient Thermal Resistance determined per JEDEC JESD51-3 and JESD51-6. Thermal test board meets JEDEC specification for this package.
2. Junction-to-Case at the top of the package determined using MIL-STD 883 Method 1012.1. The cold plate temperature is used for the case temperature. Reported value includes the thermal resistance of the interface layer.
3. Junction-to-Lid-Top thermal resistance determined using the using MIL-STD 883 Method 1012.1. However, instead of the cold plate, the lid top temperature is used here for the reference case temperature. Reported value does not include the thermal resistance of the interface layer between the package and cold plate.

8 Dimensions

8.1 Obtaining package dimensions

Package dimensions are provided in package drawings.

Downloaded from Arrow.com.

To find a package drawing, go to nxp.com and perform a keyword search for the drawing's document number:

Package	Body size	Pitch	NXP document number
621 FC-BGA	17 mm x 17 mm	0.65 mm	98ASA00819D

9 Pinouts

9.1 Package pinouts and signal descriptions

For package pinouts and signal descriptions, refer to the Reference Manual.

10 Reset sequence

This section describes different reset sequences and details the duration for which the device remains in reset condition in each of those conditions.

10.1 Reset sequence duration

Table 66 specifies the minimum and the maximum reset sequence duration for the five different reset sequences described in Reset sequence description.

Table 66. RESET sequences[1]

No.	Symbol	Parameter	T_{Reset}			Unit
			Min	Typ	Max	
1	T_{DRB}	Destructive Reset Sequence, All LBIST/MBIST enabled	25	—	95	ms
2	T_{DR}	Destructive Reset Sequence, BIST disabled	50	—	90	µs
3	T_{ERLB}	External Reset Sequence Long, Unsecure Boot, BIST enabled	25	—	95	ms
4	T_{FRL}	Functional Reset Sequence Long, Unsecure Boot, BIST disabled	50	—	90	µs
5	T_{FRS}	Functional Reset Sequence Short, Unsecure Boot, BIST disabled	2	—	7	µs

1. All the Reset durations assume boot code execution time for Execute-in-place for QuadSPI booting, Unsecure mode with Trimmed FIRC module. Boot code is using execution using PLL and no DCD download is assumed. Secure Boot duration and DCD download time is dependent on the given application image. DCD downloads and application image download/ authentication times will be over and above these durations.

Downloaded from Arrow.com.

10.2 Boot performance matrix

Total Boot execution time will be the addition of DCD execution time to configure DDR and application image download time.

Table 67. Boot execution time

Boot source	QSPI_CLOCK	CSE_CLOCK	CM4 clock (core counter register clock)	QSPI configuration	SRAM (FAST BOOT) Non secure	DCD execution time for DDR	DDR(FAST BOOT)	DDR(FAST BOOT)	DDR(FAST BOOT)	DDR(FAST BOOT)	Authentication time from DDR	Authentication time from DDR	Authentication time from DDR
Boot Length in bytes	100 MHz	133 MHz	133 MHz	HyperFlash	4Mbytes	NA	4 MB	256 KB	128 KB	32 KB	NA	NA	NA
Authentication Length in bytes	100 MHz	133 MHz	133 MHz	HyperFlash	NA	NA	NA	NA	NA	NA	256 KB	128 KB	32 KB
Time in ms	100 MHz	133 MHz	133 MHz	HyperFlash	27.302	3.47	25.347	1.63	0.819	0.211	7.416525	4.154055	1.7064075

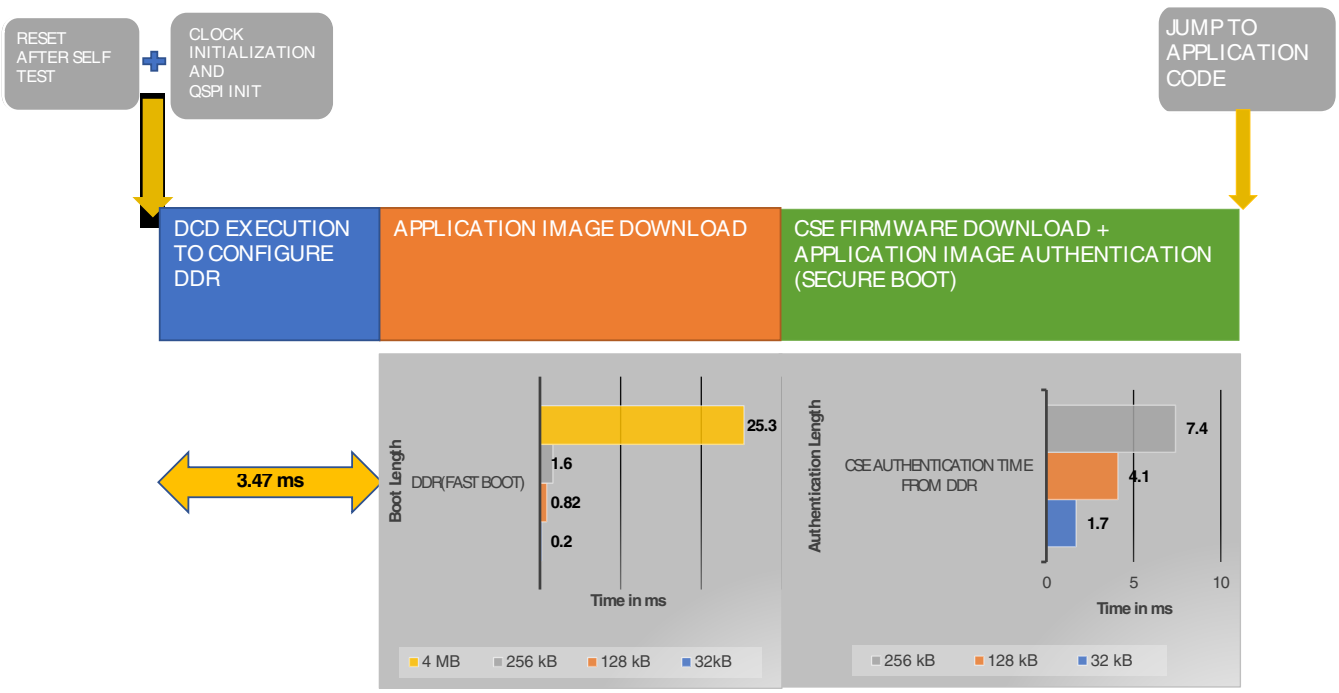

Figure 58. Boot diagram

Downloaded from Arrow.com.

10.3 Reset sequence description

The figures in this section show the internal states of the device during the five different reset sequences. The doted lines in the figures indicate the starting point and the end point for which the duration is specified in Table 66.

The application code execution starts when boot code has finished all the mandatory tasks and jumps over the downloaded image. The download time and authentication time will vary as per Application code image size.

"EXT_POR" pin (Active Low) is recommended to be de-asserted after external supplies became stable. Deassertion of EXT_POR pin triggers the start of reset sequence.

The following figures show the internal states of the device during the execution of the reset sequence and the possible states of the RESET (Active-low) signal pin.

NOTE

RESET (Active-low) is a bidirectional pin. The voltage level on this pin can either be driven low by an external reset generator or by the device internal reset circuitry. A high level on this pin can only be generated by an external pullup resistor (10-15 kiloohm) which is strong enough to overdrive the weak internal pulldown resistor. The rising edge on RESET (Active-low) in the following figures indicates the time when the device stops driving it low. The reset sequence durations given in Table 66 are applicable only if the internal reset sequence is not prolonged by an external reset generator keeping RESET (Active-low) asserted low beyond the last Phase3.

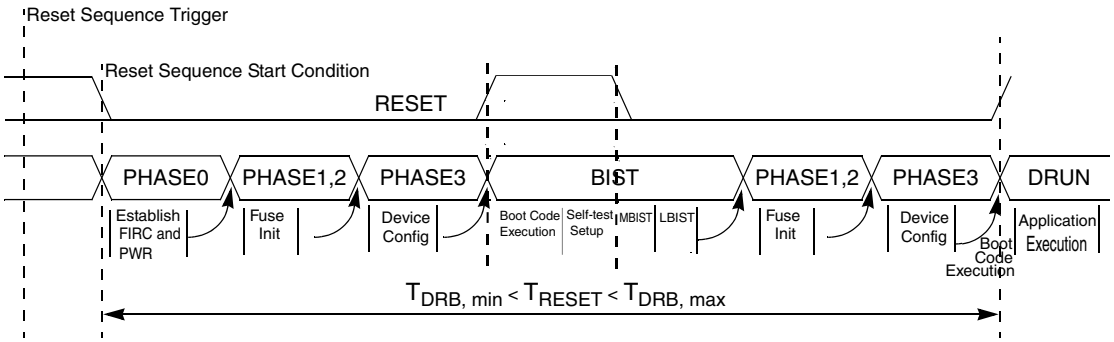

Figure 59. Destructive reset sequence, BIST enabled

Downloaded from Arrow.com.

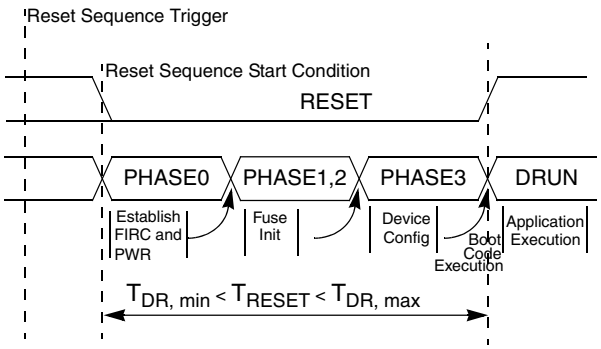

Figure 60. Destructive reset sequence, BIST disabled

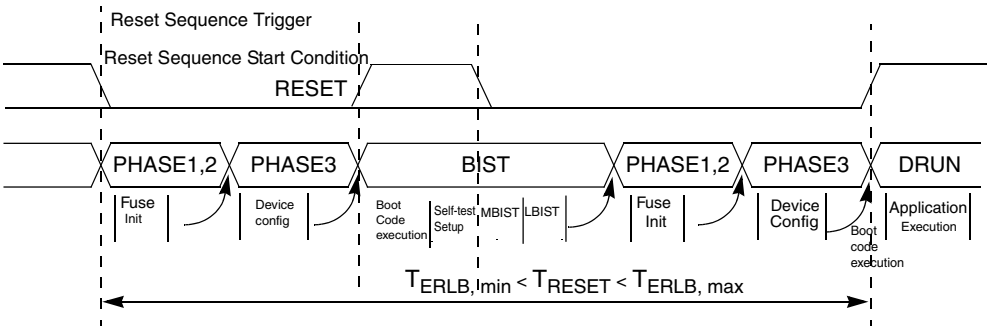

Figure 61. External reset sequence long, BIST enabled

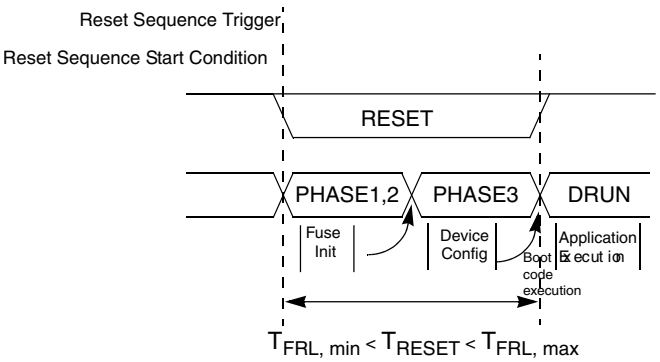

Figure 62. Functional reset sequence long

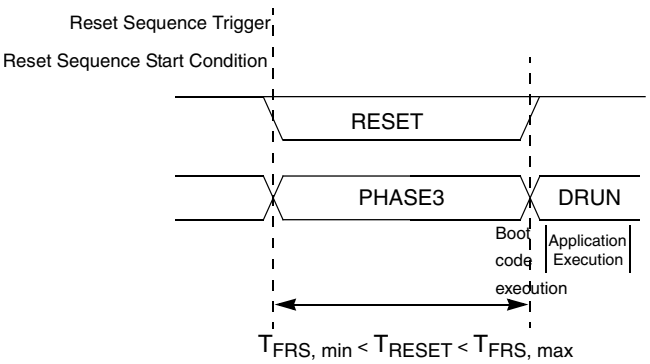

Figure 63. Functional reset sequence short

Downloaded from Arrow.com.

The reset sequences shown in Figure 62 and Figure 63 are triggered by functional reset events. RESET (Active-low) is driven low during these two reset sequences only if the corresponding functional reset source (which triggered the reset sequence) was enabled to drive RESET (Active-low) low for the duration of the internal reset sequence. See the RGM_FBRE register in the device reference manual for more information.

11 Power sequencing requirements

While designing the system, it is important to take care of following constraints:

- P_{CIE_VP} and $_{PCIE_VPH}$ supplies should be powered up within 50 ms of each other.
- $V_{DD_HV_CSI}$ and $_{VDD_LV_CSI}$ supplies should be powered up within 50 ms of each other.
- V_{REFH_ADC} should never differ from $V_{DD_HV_ADV}$ by more than 100 mV at any time including during power-up or power-down.
- DDR0_VREF0 and DDR1_VREF0 supplies are expected to be 0.5 of $V_{DD_DDR0_IO}$ and $V_{DD_DDR1_IO}$ supplies and are to track $V_{DD_HV_DDR0}$ and $_{VDD_HV_DDR1}$ supply variations as measured at the receiver. Peak-to-Peak noise on DDR0_VREF0 and DDR1_VREF0 supplies should be between +/- 15 mV.

NOTE

VDD_HV_ADV must be powered for using LFAST interface.

Each supply group mentioned in the table below can be independently powered up/down from the other supply groups. Supply domains belonging to the same supply group are supposed to be ganged together on board level (with appropriate noise isolation) to allow this group to power up/down together. Following supply groups have been tested for power sequencing tests:

Table 68. Supply groups tested for power sequencing

Supply Group No.	Voltage domain	S32V234 power supplies
1	3.3 V	V_{DD_GPIO0}
2	1.8 V/3.3 V	V_{DD_GPIO1}
3	1.8 V/3.3 V	V_{DD_GPIO2}
4	1.8 V/3.3 V	$V_{DD_HV_IO_VIU0}$
5	1.8 V/3.3 V	$V_{DD_HV_IO_VIU1}$
6	1.8 V/3.3 V	$V_{DD_HV_DIS}$
7	1.8 V/3.3 V	$V_{DD_HV_IO_FLA}$
8	1.5 V/1.8 V/2.5 V/3.3 V	$V_{DD_HV_IO_ETH}$
9	1.8 V	$V_{DD_HV_PLL}$, $V_{DD_HV_LFASTPLL}$, $V_{DD_HV_XOSC}$, $V_{DD_HV_PMC}$, $V_{DD_HV_EFUSE}$, $V_{DD_HV_DDR}$, P_{CIE_VPH}, $V_{DD_HV_CSI}$, V_{DDIO_LFAST}

Table continues on the next page...

Downloaded from Arrow.com.

Table 68. Supply groups tested for power sequencing (continued)

10	1.0 V	$V_{DD_LV_CORE_SOC}$, $V_{DD_LV_CORE_ARM}$, $V_{DD_LV_GPU}$, $V_{DD_LV_PLL}$, P_{CIE_VP}, $V_{DD_LV_CSI}$
11	1.8 V	$V_{DD_HV_ADV}$, V_{REFH_ADC}
12	1.2 V/1.35 V/1.5 V	$V_{DD_DDR_IO}$

12 Revision history

Table 69. Revision history

Revision	Date	Description of changes
1	03/2015	Initial release.
2	06/2015	Overall: • Editorial changes. Added topic PCB routing guideliness. Added topic RESET pin glitch filter specifications. In Table 15, added the sentence "For internal ADC channels, the minimum sampling time required is 3 microsecond" in the foot note on "Sample time". In Power Management Controller (PMC) electrical specifications, changed the introductory paragraph. Added Low Voltage Detector for IRC (VDD_HV_OSC). In Table 3, modified minimum value of 3.3 V input/output supply voltage. In Reset sequence description, updated both "External reset sequence long, BIST enabled" and "Destructive reset sequence, BIST enabled" images. In Table 17, updated the condition of Oscillator start-up time from f_{OSC} = 24,40 MHz to $f_{FXOSCHS}$ = 24,40 MHz. In Power sequencing requirements, changed VREFL_ADC to VREFH_ADC, VDD_HV_CSI1/2 to VDD_HV_CSI, and VDD_LV_CSI1/2 to VDD_LV_CSI. In Table 10, added footnote in ovdd. In Table 5, changed VS4 to S32V234 and VS2 to S32V232. Made extensive changes in QuadSPI AC specifications. In Table 3, added Supply ramp rate specifications. In Table 5, changed maximum value of vdd_hv_pll from 30 mA to 35 mA and maximum value of vdd_lv_pll from 55 mA to 80 mA. In DDR3 and DDR3L timing parameters , added a note. In Table 30, updated the table title to include DDR3L. Also updated minimum value of DDR4. DDR5, DDR6, and DDR7 and changed units of DDR1 and DDR2. In Table 31, updated the table title to include DDR3L. Also updated minimum value of DDR26. In Table 32, updated the table title to include DDR3L. Updated minimum values of DDR17 and DDR18, and units of DDR21 and DDR22. In Table 33, updated LP1 and LP2 symbols and units. In Figure 15, changed figure title from “LPDDR3 write cycle” to “LPDDR2 write cycle”.

Table continues on the next page...

Downloaded from Arrow.com.

Table 69. Revision history (continued)

Revision	Date	Description of changes
		In Table 35, updated minimum value of LP18, and minimum and maximum value of LP21. Also updated units of LP21, LP22, and LP23. Updated topic titles DDR SDRAM Specific Parameters (DDR3, DDR3L, and LPDDR2), DDR3 and DDR3L timing parameters , DDR3 and DDR3L read cycle, and DDR3 and DDR3L write cycle. Updated figure titles Figure 10, Figure 11, and Figure 12. In Reset sequence description, added value of external pull up resistor as 10-15 kiloohm. In Table 18, modified the parameter "IRCOSC frequency variation afterprocess trimming" to "IRCOSC frequency variation with respect to supply and temperature after process trimming". Updated Table 16. In Ultra High Speed SD/SDIO/MMC Host Interface (uSDHC) AC timing, added the sentence "uSDHC_VEND_SPEC[CMD_OE_PRE_EN] field should be programmed to 1 for proper functioning of uSDHC external interface". In Table 60, updated maximum value of TCK Rise and Fall Times. In Table 59, updated minimum value of TCK Cycle Time and the footnote. Also, added CJTAG TCK Cycle Time and updated maximum value of TCK Rise and Fall Times. Added DDR3L mode and DDR3L mode DC electrical specifications. Removed LPDDR2 I/O AC specifications. Deleted the word "Dual" from "Dual QuadSPI supporting Execute-In-Place (XIP)" in "Features" section as there is only one QuadSPI. Changed all instances of XOSC to FXOSC throughout the document. Changed all instances of MIPI-CSI2, MIPI, and CSI2 to MIPICSI2 throughout the document.
2.1	06/2015	Overall: • Editorial changes.

3	04/2017	• Editorial changes.
		• Updated Figure 1.
		• Modified Figure 4.
		• Modified Figure 6.
		• Modified Figure 7.
		• Updated Figure 29.
		• Updated Figure 38.
		• Updated Figure 43.
		• Updated Figure 48.
		• Removed Figure "DSPI modified transfer format timing – slave, CPHA = 0" and Figure "DSPI modified transfer format timing — slave, CPHA = 1".
		• In Table 1, updated ARM Cortex-A53 Core feature for S32V232 from “Up to 600 MHz Quad ARM Cortex-A53” to “Up to 800 MHz Dual ARM Cortex-A53 (single cluster)”.
		• In Table 3 :
		  • added the footnote "All the grounds viz. VSS, VSS_XOSC,VSS_PMC and VSS_HV_ADV are tied together at the package level” in Common ground voltage.
		  • minimum operating voltage of $V_{DD_HV_IO_ETH}$ has been changed from 1.71 V to 1.5 V, and maximum value of DDR I/O supply voltage LPDDR2 changed from 1.26 V to 1.30 V.
		  • parameter “Supply ramp rate” has been changed to “Supply ramp rate for all supplies on the device”
		  • added LFAST IO bank supply (V_{DDIO_LFAST}) in the list of symbols for "1.8 V supply voltage (for analog circuits, PLLs)"
		• In Table 4 :

Table continues on the next page...

Downloaded from Arrow.com.

Table 69. Revision history

Revision	Date	Description of changes
		• added Band Gap Reference value of PMC. • maximum value of trimmed VTH threshold of VDD_LV_CORE_SOC (low voltage monitoring) has been changed from 939 to 946 mV, and maximum values of trimmed VTL and VTH threshold of VDD_LV_CORE_SOC (high voltage monitoring) have been changed from 1081 to 1093, and 1096 to 1093 mV, respectively. • In Table 5 : • modified table footnotes to clarify that power numbers are estimated for 1.01 V and 125 °C. • VDD_HV_LFASTPLL Simulation values (Maximum) and Maximum Values of Use cases "PLL operating with 320 MHz (LFAST used)" and "PLL not operational (LFAST not used)" have been modified. • use case "eFuse reading happening" of VDD_HV_EFUSE and its specifications are removed. • max simulation values of MIPICSI2 interface operating as per MIPICSI not used (not powered?) in VDD_HV_CSI and VDD_LV_CSI have been changed from .1 mA to 1.6 mA and 11 mA to 15 mA. • for PCIE_VP and PCIE_VPH, Powered down (leakage only) use case has been changed to Reset/idle. Max simulation values for PCIE_VP and PCIE_VPH (Reset/idle) use cases are removed, and PCIE_VPH (5 GHz operation) use case has been changed from 30 to 32 mA. Max values of both PCIE_VP and PCIE_VPH (for both cases) have been included. • modified the table heading. Removed Front Camera (w power binning) from VDD_LV_CORE and updated max values for "Adder 4x A53 CPU with Dhrystone MIPS running on each CPU @1 GHz" from 1.0 A to 1.4 A. • removed "Simulation values" column. • PCIE_VPH limits changed for "5 GHz operation (PCIe 2.0)" from 40 mA to 50 mA and "Reset/Idle" from 11 mA to 20 mA. • minimum and maximum values of PMC Band Gap Reference value have been changed from 1185 to 1176 mV, and 1215 to 1224 mV respectively. • In Table 10 : • added the note "After bootup, application software should switch to manual voltage detect mode using VSEL_x settings of SRC_GPR14 register to ensure optimum performance of the GPIO pads. Please refer to SRC chapter in the Reference Manual for the register details." • changed the maximum value of Input current (no pull-up/down) from 1 to 8 µA. • removed "Input Hysteresis" • maximum value of parameter "Input current (50 kilohm PU)" has been changed from 100 to 150 µA. • maximum value of parameter "Input current (100 kilohm PU)" has been changed from 50 to 60 µA. • removed parameter "pad keeeper resistance" and "maximum external resistor value that is guaranteed to overdrive the pad keeper". • maximum value of parameter "Input current (50 kilohm PD)" with test condition Vin=0 has been changed from 1 to 8 µA. Also, when Vin = Vdd, maximum value of Input current (33 kilohm PU), Input current (50 kilohm PU), and Input current (100 kilohm PU) have been changed from 1 to 6 µA. • test conditions "Ioh=-1 mA" changed to "Ioh=-100 µA" and "Ioh= 1 mA" changed to "Ioh=-100 µA". • In Table 12, Table 13, and Table 14, • Added Vih (DC) and Vil (DC) specifications . • All tri-state supply current items are removed and updated test conditions of "High-level output voltage" and "Low-level output voltage". • Maximum value of parameter " Input current (no pullup/pulldown)" has been changed from 3 to 5 µA, 3 to 5 µA, and 2.5 to 5 µA, respectively.

Table continues on the next page...

Downloaded from Arrow.com.

Table 69. Revision history

Revision	Date	Description of changes

		• In Table 12, removed parameter “Rod_keep”. Updated minimum, typical, and maximum value of parameter Rkeep.
		• In Table 13, removed parameter “Rod_keep”.
		• In Table 14, removed parameter “Rod_keep” and deleted footnote “Note that the Jedec LPDDR2 specification (JESD209-2B) supersedes any specification in this document”.
		• In Table 15
		  • updated ADC Input Clock frequency
		  • added ADC Conversion clock frequency
		  • removed conditions of Sample time and Conversion time
		  • removed all information about parameter “Max positive/negative injection” and modified “Total unadjusted error” in “TUE”.
		• In Table 17, modified the minimum and maximum values of V_{IH} and V_{IL}.
		• In Table 19 :
		  • Changed maximum value of SSCG modulation depth from -6% to -5.4%, and added condition STEPSIZE x STEPNO < 18432.
		  • Removed “PLL VCO frequency” and “PLL output clock PHI0”, and deleted footnote "All PLLs have same specifications. PLL programming should take maximum clock frequencies as per Reference Manual recommendation”.
		• Added Table 20.
		• In Table 22 :
		  • unit for Total Jitter has been changed from ps to ns.
		  • removed max Deterministic and max Random jitter specifications; added footnote in max Total Jitter.
		• In Table 23 :
		  • Made modification in DDR mode.
		  • Updated values of QuadSPI_SOCCR[FDCC_FB] and QuadSPI_SOCCR[FDCC_FA] for SDR and DDR mode (internal DQS Mode) and added footnote “Device qualification is not complete.”
		• Deleted Table "QuadSPI input timing (DDR mode) specifications with learning"
		• In Table 25 changed Minimum value of Chip select output setup time and Chip select output hold time.
		• In Table 26
		  • changed maximum value of SCK Clock Frequency and updated configuration. Also, changed table caption
		  • changed the minimum value of "Setup time for incoming data".
		• In Table 27 :
		  • deleted "Chip select output setup time" and "Chip select output hold time".
		  • changed the maximum value of "Output Data Valid" and minimum value of "Output Data Hold".
		• In Table 28, updated minimum value of parameters “Setup time for incoming data” and “Hold time for incoming data”.
		• In Table 29, updated maximum value of “Ck to Ck2 skew max” and minimum value of “Ck to Ck2 skew min”.
		• In Table 30 changed symbol and minimum value of DDR4, DDR5, DDR6, and DDR7.
		• In Table 31 modified minimum value of DDR26 from 540 to 563 ps.
		• In Table 32 changed the symbol and minimum value of DDR17 and DDR18.
		• In Table 33 changed the symbol and minimum value of parameters CKE setup time, CKE hold time, CA setup time, and CA hold time.
		• In Table 34 changed the minimum value of LP26.
		• In Table 35 changed the symbol and minimum value of LP17 and LP18.
		• In Table 36 :
		  • Updated footnotes to include changes in PCSSCK, CSSCK, PASC, ASC values.
		  • Updated footnotes in minimum timing of parameter DSPI cycle time, PCS to SCK delay, and After SCK delay.

Table continues on the next page...

Downloaded from Arrow.com.

Table 69. Revision history

Revision	Date	Description of changes

		• In Table 37 changed the heading of table from "SD/eMMC4.3 interface timing specification" to "SDR mode timing specification".
		• In Table 38 changed the heading of table from "SD3.0/eMMC4.5 interface timing specification" to "DDR mode timing specification" and updated parameter "Clock Frequency (eMMC4.5 DDR)" to "Clock Frequency (eMMC4.4 DDR)".
		• In Table 39 :
		  • updated min, typ, and max values of V_{OS_DRF} and $\lvert\Delta_{VOD_DRF}\rvert$
		  • deleted R_{OUT_DRF} and V_{HYS_DRF}
		  • modified R_{IN_DRF}
		  • added LFAST Clock characteristics
		  • parameter Rise/Fall time (10% - 90% of swing) is changed to Rise/Fall time (20% - 80% of swing) and minimum and maximum values of the parameter have been changed from 0.26 to 0.1 ns and 1.5 to 0.73 ns.
		  • added footnote “Rise/fall time is defined for 20 to 80% signal voltage levels, at 2pF Cload and 100 Ohm termination resistor load”.
		  • Updated minimum and maximum value of “Common mode voltage” (Transmitter) from 1.125 to 1.1 V and 1.375 to 1.475 V.
		  • Updated maximum value of “Common mode voltage” (Receiver) from 1.6 to 1.5 V.
		  • Updated the footnote in minimum and maximum values of “Common mode voltage” (Receiver).
		  • Changed minimum value of “Differential input voltage” (Receiver) from 100 to 150 mV.
		• In Table 44 changed minimum and maximum value of RX_CLK duty cycle.
		• In Table 45 :
		  • changed minimum and maximum value of TX_CLK duty cycle and minimum value of Out delay from TX_CLK.
		  • included "TX_CLK to Output Valid" and "TX_CLK to Output Invalid".
		• In Table 46 removed the foot note from "Characteristic".
		• In Table 50 :
		  • Changed minimum value of “Data hold time0” and “Data setup time” from 0 to 25 ns, and 0 to 250 (standard mode); 100 (fast mode) respectively
		  • Added note "ipg_clk frequency should be greater than 5 MHz for standard mode and 20 MHz for fast mode" to minimum value of “Data setup time”
		  • Updated the column "Number"
		• In Table 51, minimum value of “Stop condition setup time” has been changed from 10 to 11 IPS bus cycle.
		• In Table 52, changed Display pixel clock period from 6.4 to 6.66 ns.
		• In Table 53, changed pixel clock period from 6.36 to 6.66 ns.
		• In Table 54, changed description "VIU data setup time" to "VIU Data/Hsync/Vsync setup time" and "VIU data hold time" to "VIU Data/Hsync/Vsync hold time".
		• In Table 55, removed "Contention Line Receiver DC Specifications".
		• In Table 58, Data to Clock Setup Time and Clock to Data Hold Time are updated to include condition where the PHY is used to a maximum data rate of 1.0Gbps and data rates greater than 1.0Gbps.
		• In Table 61, updated Clock frequency.
		• In Table 66 :
		  • changed minimum and maximum values of “Destructive Reset Sequence, BIST disabled” from 5 ms to 50 µs and 10 ms to 90 µs
		  • changed minimum and maximum values of “Functional Reset Sequence Long, Unsecure Boot, BIST disabled” from 5 ms to 50 µs and 10 ms to 90 µs
		  • changed minimum and maximum values of ”Functional Reset Sequence Short, Unsecure Boot, BIST disabled” from 5 ms to 2 µs and 6 ms to 7 µs.
		• Added Table 68 and a paragraph preceding it “Each supply group mentioned in the table below can be independently powered up/down from the other supply groups. Supply domains belonging to the same supply group are supposed to be ganged together on board level (with appropriate noise isolation) to allow this group to power up/down together”.

Table continues on the next page...

Downloaded from Arrow.com.

Table 69. Revision history

Revision	Date	Description of changes

		• All IRC and IRCOSC in the document changed to FIRC.
		• In Features, modified JPEG and H.264 information.
		• Removed hysteresis information from Features, Table 1, and from Table 10.
		• Modified content in Family comparison.
		• Added topic Operation above maximum operating conditions.
		• Updated Ordering information
		• In Power consumption, modified the statement “These specifications are design targets and are subject to change per device characterization” to “These specifications are subject to change per device characterization.”
		• In PCB routing guidelines changed the subheading from "DDR3 PCB design" to "DDR3/DDR3L PCB design".
		• Added topic GPIO speed at various voltage levels.
		• In DDR pads, deleted table "DDR operating conditions".
		• In ADC electrical specifications, Updated the note to “While measuring scaled supply voltages on ADC Channels, Maximum (+5/-10%) variation can be expected .”
		• In Main oscillator electrical characteristics, added crystal information.
		• In ADC electrical specifications added the note “While measuring scaled supply voltages on ADC Channels, Maximum 10% variation can be expected”.
		• In Thermal Monitoring Unit (TMU), changed all occurrences of “Temperature Sensor” to “Thermal Monitoring Unit”.
		• In 48 MHz FIRC electrical characteristics, min and max value of “IRCOSC frequency variation with respect to supply and temperature after process trimming” has been changed from -5 to -10 and +5 to +10 %.
		• In QuadSPI AC specifications deleted sentence "DDR configurations are applicable when used without learning enabled."
		• Added a note in DSPI timing.
		• In Ultra High Speed SD/SDIO/MMC Host Interface (uSDHC) AC timing changed the introductory paragraph.
		• Renamed topic "SD/eMMC4.3 (Single Data Rate) AC Timing" to "SDR Mode Timing Specifications". In this topic SDR mode timing specifications deleted the introductory paragraph and deleted the existing figure. Two new figures Figure 23 and Figure 24 are added. Modified Table 37.
		• Renamed topic "SD/eMMC4.4/5.0 (Dual Data Rate) eSDHCv3 AC Timing" to "DDR Mode Timing Specifications". In this topic DDR mode timing specifications, deleted the introductory paragraph and replaced the existing figure with four new figures (Figure 25, Figure 26, Figure 27, Figure 28).
		• In DSPI timing changed the note from "DSPI on this chip neither supports interaction with a Slave in MTFE mode nor acts as one" to "DSPI Timing specs on this chip are valid with Slave in Classic Mode only."
		• In Ethernet Switching Specifications, ” statement "For RGMI, output load is 15 pF and pad settings are DSE[2:0] = 111 and FSEL[1:0] = 11" is changed to "For RGMII, output load is 5 pF and pad settings are DSE[2:0] = 111 and FSEL[1:0] = 11."
		• Added topic MII/RMII Serial Management channel timing (MDC/MDIO).
		• In Video input unit (VIU) timing specifications heading "Video input unit (VIU) electrical specifications" changed to "Video input unit (VIU) timing specifications".
		• Added topic Boot performance matrix.
		• In Power sequencing requirements :
		  • added note "VDD_HV_ADV must be powered for using LFAST interface". Changed “VREFH_ADC should never be more than 100 mV above VDD_HV_ADV” to “VREFH_ADC should never differ from VDD_HV_ADV by more than 100 mV at any time including during power-up or power-down”.
		  • Changed the sentence from "DDR0_VREF0 and DDR1_VREF0 supplies are expected to be 0.5 of VDD_HV_DDR0 and VDD_HV_DDR1 I/O supplies and are to track VDD_HV_DDR0 and VDD_HV_DDR1 supply variations as measured at the receiver” to "DDR0_VREF0 and DDR1_VREF0 supplies are expected to be 0.5 of VDD_DDR0_IO

Table continues on the next page...

Downloaded from Arrow.com.

Table 69. Revision history (continued)

Revision	Date	Description of changes
		and VDD_DDR1_IO supplies and are to track VDD_HV_DDR0 and VDD_HV_DDR1 supply variations as measured at the receiver”. • Updated the statement "VDD_HV_CSI and VDD_LV_CSI should be powered up together on board to prevent any electrical crossover currents" to "VDD_HV_CSI and VDD_LV_CSI supplies should be powered up within 50 ms of each other".
3.1	07/2017	• The only changes between S32V234 Rev 3.1 and Rev 3 is the removal of "Confidential Proprietary" from the footer.

Downloaded from Arrow.com.

How to Reach Us:

Home Page:
nxp.com

Web Support:
nxp.com/support

Information in this document is provided solely to enable system and software implementers to use NXP products. There are no express or implied copyright licenses granted hereunder to design or fabricate any integrated circuits based on the information in this document. NXP reserves the right to make changes without further notice to any products herein.

NXP makes no warranty, representation, or guarantee regarding the suitability of its products for any particular purpose, nor does NXP assume any liability arising out of the application or use of any product or circuit, and specifically disclaims any and all liability, including without limitation consequential or incidental damages. “Typical” parameters that may be provided in NXP data sheets and/or specifications can and do vary in different applications, and actual performance may vary over time. All operating parameters, including “typicals,” must be validated for each customer application by customer’s technical experts. NXP does not convey any license under its patent rights nor the rights of others. NXP sells products pursuant to standard terms and conditions of sale, which can be found at the following address: nxp.com/SalesTermsandConditions.

NXP, the NXP logo, NXP SECURE CONNECTIONS FOR A SMARTER WORLD, COOLFLUX, EMBRACE, GREENCHIP, HITAG, I2C BUS, ICODE, JCOP, LIFE VIBES, MIFARE, MIFARE CLASSIC, MIFARE DESFire, MIFARE PLUS, MIFARE FLEX, MANTIS, MIFARE ULTRALIGHT, MIFARE4MOBILE, MIGLO, NTAG, ROADLINK, SMARTLX, SMARTMX, STARPLUG, TOPFET, TRENCHMOS, UCODE, Freescale, the Freescale logo, AltiVec, C-5, CodeTest, CodeWarrior, ColdFire, ColdFire+, C-Ware, the Energy Efficient Solutions logo, Kinetis, Layerscape, MagniV, mobileGT, PEG, PowerQUICC, Processor Expert, QorIQ, QorIQ Qonverge, Ready Play, SafeAssure, the SafeAssure logo, StarCore, Symphony, VortiQa, Vybrid, Airfast, BeeKit, BeeStack, CoreNet, Flexis, MXC, Platform in a Package, QUICC Engine, SMARTMOS, Tower, TurboLink, and UMEMS are trademarks of NXP B.V. All other product or service names are the property of their respective owners. ARM, AMBA, ARM Powered, Artisan, Cortex, Jazelle, Keil, SecurCore, Thumb, TrustZone, and µVision are registered trademarks of ARM Limited (or its subsidiaries) in the EU and/or elsewhere. ARM7, ARM9, ARM11, big.LITTLE, CoreLink, CoreSight, DesignStart, Mali, mbed, NEON, POP, Sensinode, Socrates, ULINK and Versatile are trademarks of ARM Limited (or its subsidiaries) in the EU and/or elsewhere. All rights reserved. Oracle and Java are registered trademarks of Oracle and/or its affiliates. The Power Architecture and Power.org word marks and the Power and Power.org logos and related marks are trademarks and service marks licensed by Power.org.

© 2017 NXP B.V.

Document Number S32V234
Revision 3.1, 07/2017

Downloaded from Arrow.com.