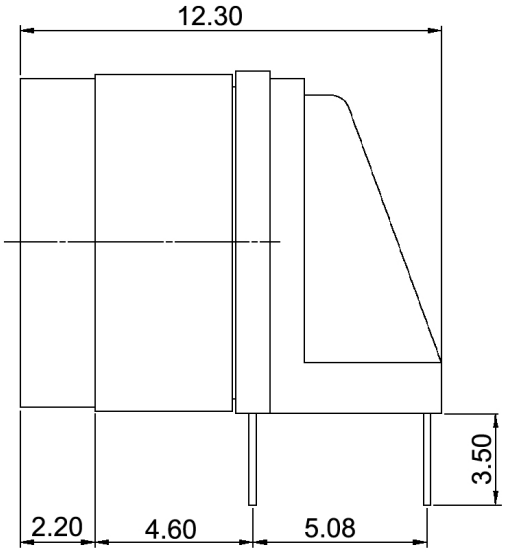

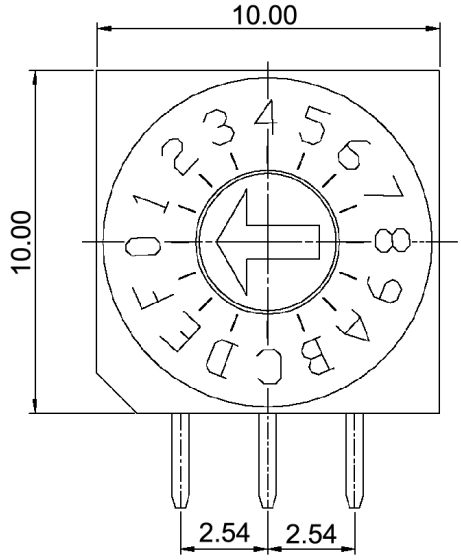

P.C.B. LAYOUT

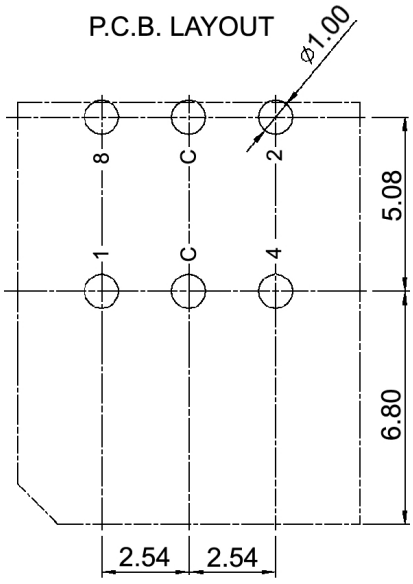

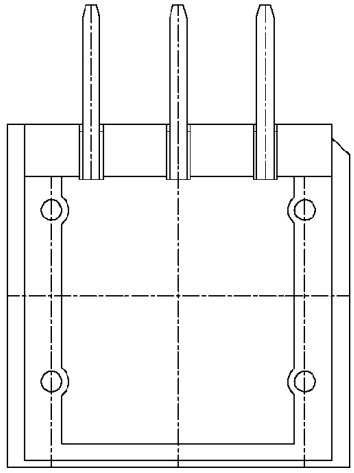

Hexadecimal inverse

		Complement coded				
		C	1	2	4	8
16 Positions	0	●	●	●	●	●
	1	●		●	●	●
	2	●	●		●	●
	3	●			●	●
	4	●	●	●		●
	5	●		●		●
	6	●	●			●
	7	●				●
	8	●	●	●	●	
	9	●		●	●	
	A	●	●		●	
	B	●			●	
	C	●	●	●		
	D	●		●		
	E	●	●			
	F	●				

Specifications:

Contact rating:	switching:15mA, 24V DC
	non-switching: 100mA, 50V DC
Contact resistance:	80mOhm max.
Insulation resistance:	100MOhm min.
Mechanical life:	10 000 cycles
Operating force:	700gf max.
Operating temperature:	-40°C to +85°C
Storage temperature:	-40°C to +85°C
Soldering conditions:	pre-heat: max. 120°C, max. 70sec.
	wave soldering: max. 260°C, max. 10sec.
Color of actuator:	ivory
IP rating:	IP67

Tolerances: ≤ 10mm:			Date	Name	DRR 60116
≥ 10mm:			08/07	dr	
Soldering conditions	01/11	dr			
IP rating	06/09	dr	knitter-switch	30 11 98	Page
Operating temperature	11/08	dr			1/1
Temperatures	01/08	dr			
Modifications	Date	Name			

Downloaded from Arrow.com.