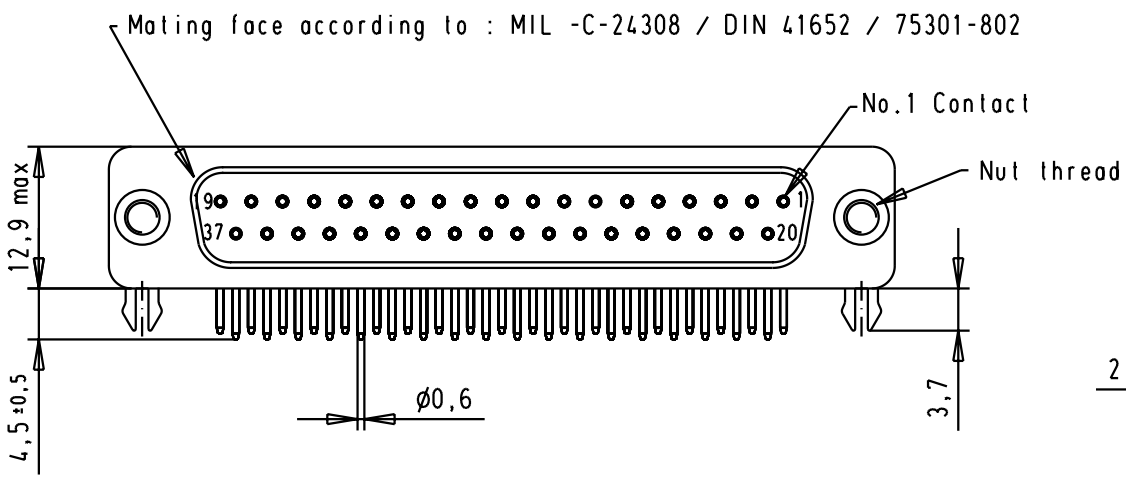

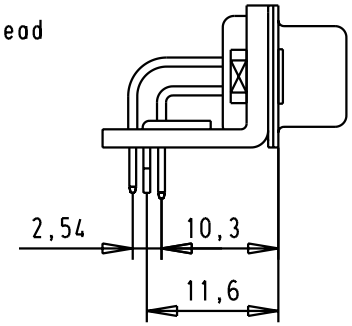

PCB Layout
Component side

SPECIFICATION

Mating Cycles	200
Capacitance	47pf ±20%
Working Voltage	100v
Current Rating	7,5A
Insulation Resistance	>1GΩ

FREQUENCY (MHz)	ATTENUATION dB
5	-
10	-
50	-
100	-
500	30dB
1000	35dB

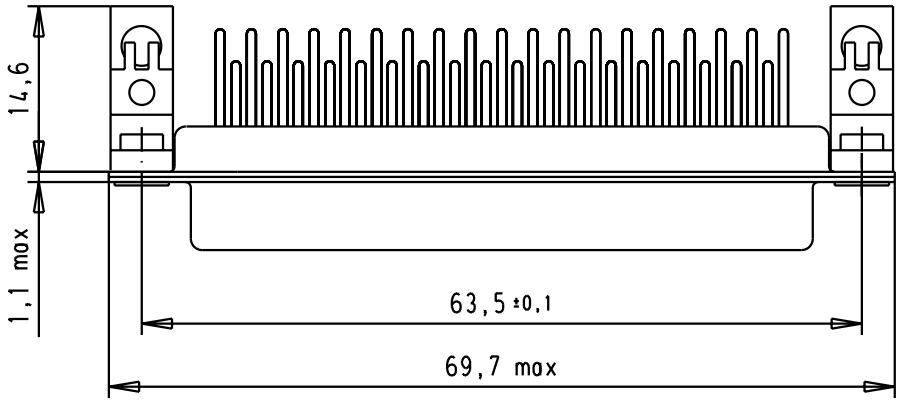

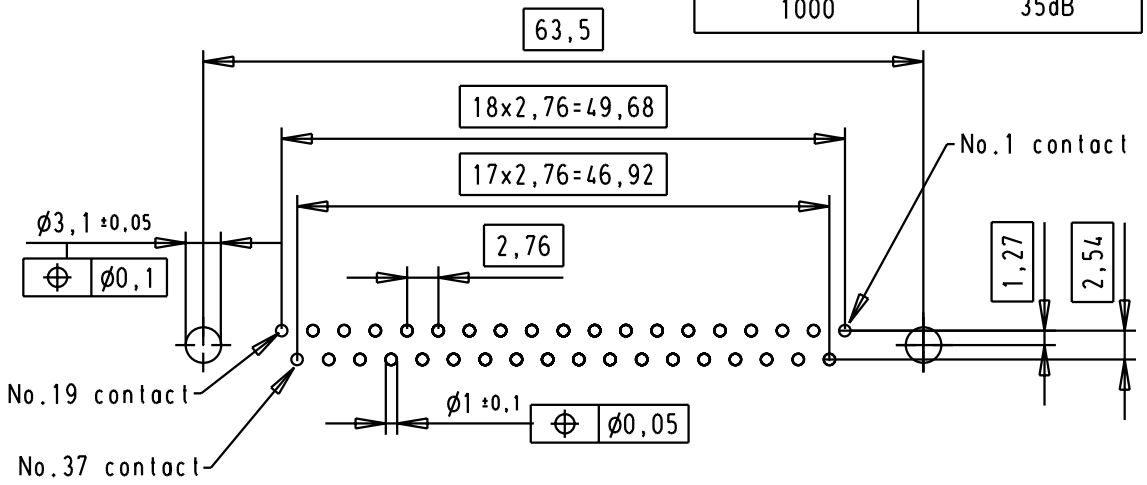

09644147213	M3				
09644147212	UNC 4-40		31058	8-JUL-02	CV
Part number	Nut thread		Mod.	Dat.	Name

	Dat.	Name
Detail.	8-JUL-02	CV
Insp.		
Stand.		

All Dim. in mm
Orig. Size DIN A 4

D-Sub, female, angled, 37 Poles, with turned solder pin, metal bracket with clip and clinch nut

Ma?Mstab/ Scale: 1.5:1

HARTING EURL
F-95972 Paris

TB 0964414721x

Sub.

Blatt/ Page 1/4