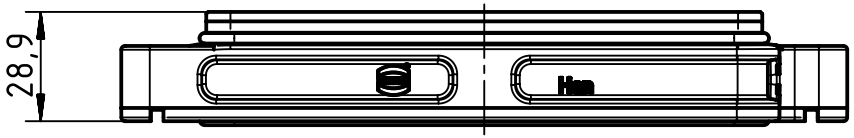

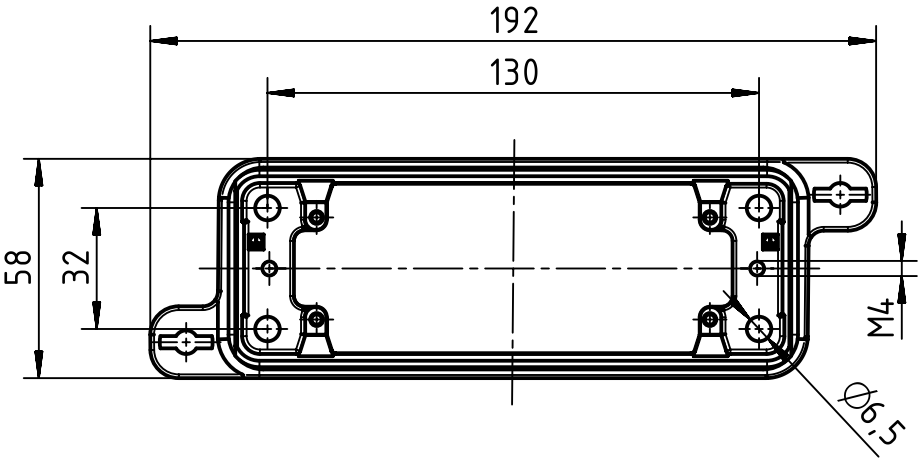

panel cut out

for EMC features,
conductive surface

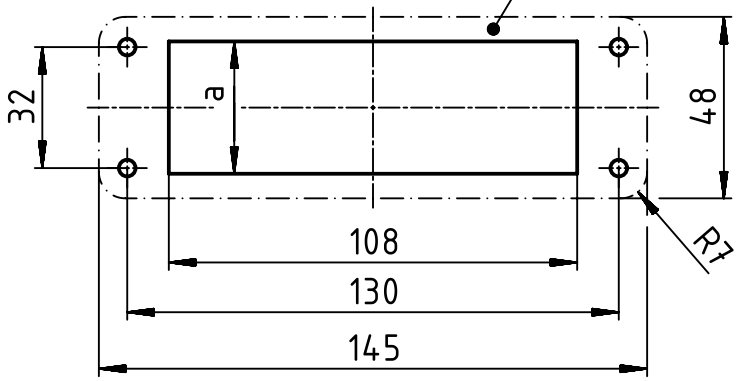

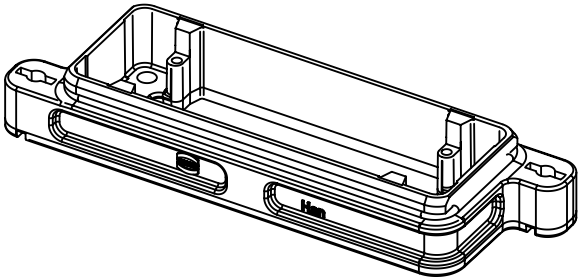

application	a
standard insert	35
HC-Modular 650	44,5

All Dimensions in mm
Original Size DIN A4

Scale 1:2

Free size tol.

Ref.

Sub.

All rights reserved

Department EL PD - DE

HARTING Electric GmbH & Co. KG
D-32339 Espelkamp

Created by	Inspected by	Standardisation	Date	State
RULLKOETTER	BERGHORN	TIEMANNA	2014-07-17	Final Release

Title: Han 24HPR Base Panel Toggle locking

Doc-Key / ECM-Nr.
100217695/UGD/004/A
500000077550

Type: TB

Number: 09 40 024 0301

Rev.: A

Page: 1/1

A4