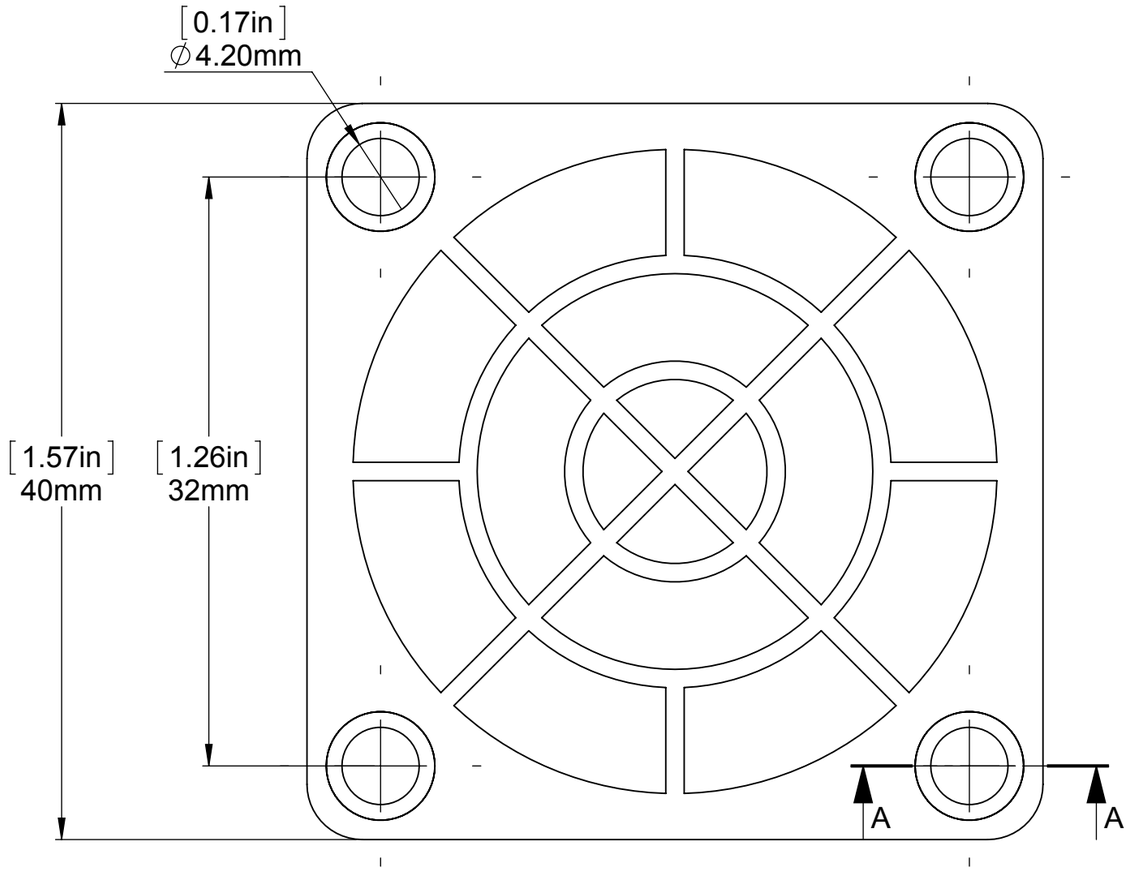

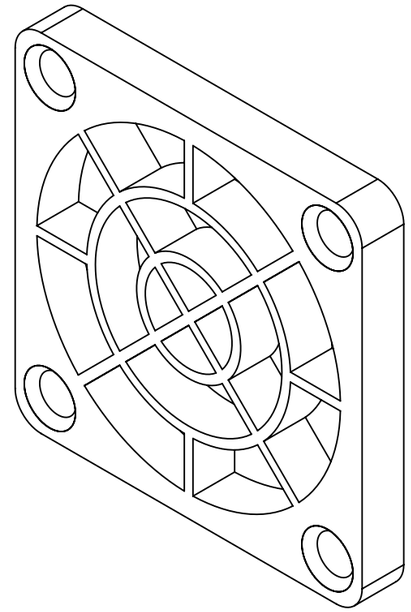

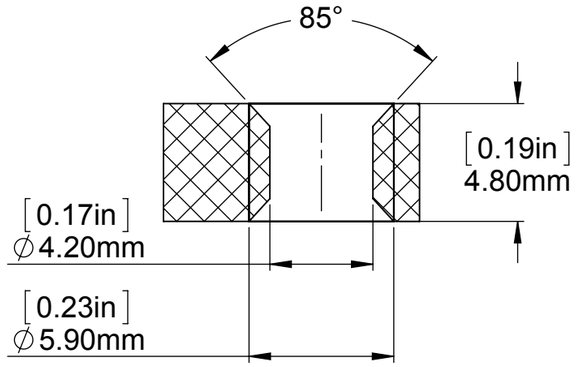

SECTION A-A
SCALE 4 : 1

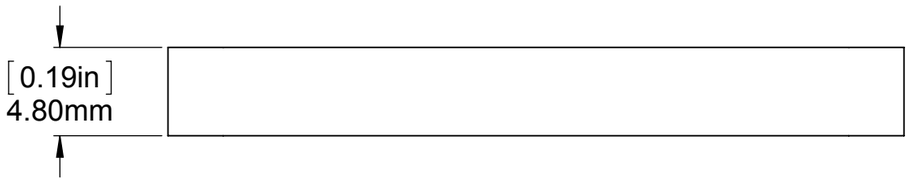

THIS DRAWING IS THE PROPERTY OF GARDTEC INC
AND IS NOT TO BE PRODUCED FOR OR COMMUNICATED
TO ANY THIRD PARTY WITHOUT SPECIFIC WRITTEN
APPROVAL OF AN OFFICER OF GARDTEC INC.

	NAME	SIGNATURE	DATE
DRAWN	HI-TECH		
CHK'D			
APPV'D			
MFG			
Q.A			

THICKNESS: 4.8

MATERIAL: UL94-VO

WEIGHT: 0.00kg

SCALE:3:1

GARDTEC INC.

TITLE: GUARD

ASSEMBLY NO. SC40-P10

A3

SHEET 1 OF 1