THIS INFORMATION IS CONFIDENTIAL AND PROPRIETARY TO CW INDUSTRIES INCORPORATED AND ITS AFFILIATES. IT MAY NOT BE DISCLOSED TO ANYONE, OTHER THAN CW INDUSTRIES PERSONNEL, WITHOUT WRITTEN AUTHORIZATION FROM CW INDUSTRIES INCORPORATED, SOUTHAMPTON, PENNSYLVANIA USA.

DIMENSIONS IN INCHES (MILLIMETERS)
DO NOT SCALE DRAWING .....

Dwg. No. GRS-4013A,B,C,-XXXX

PANEL PIERCING

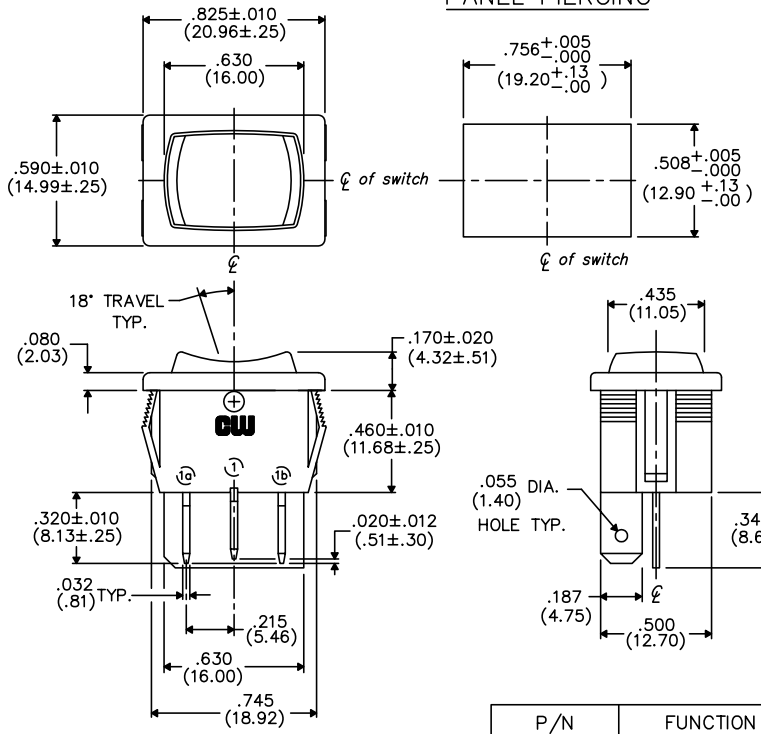

OPTIONAL INSULATING BARRIER

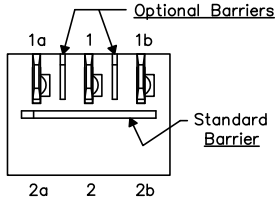

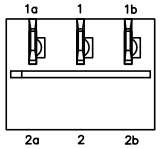

BOTTOM VIEW

MOUNTING PANEL THICKNESS

Standard–.050" (1.27mm) to .150" (3.81mm).
Optional Mounting Claws for Custom Panel thickness are available.

PANEL PIERCING POLARIZED

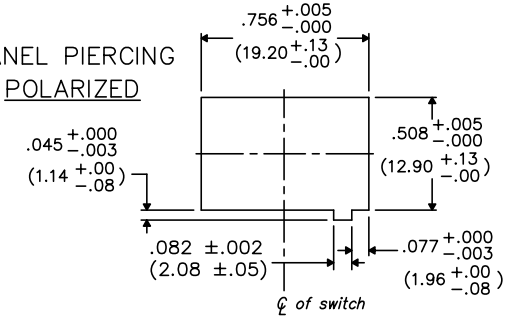

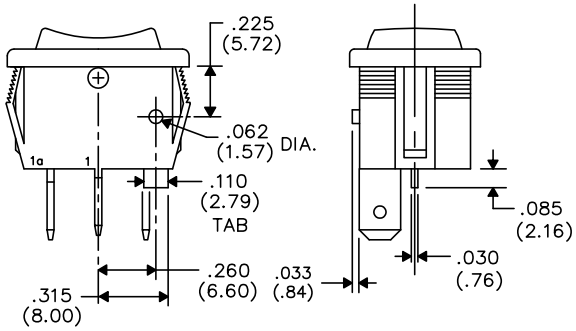

TAB AND POLARIZATION OPTIONS

P/N	FUNCTION
GRS–4013A	Double Throw On–Off–On
GRS–4013B	Double Throw On–Off–(On)
GRS–4013C	Double Throw (On)–Off–(On)

TERMINAL OPTIONS:

.187" (4.75mm) x .032" (.81mm) Solderless
.110" (2.79mm) x .032" (.81mm) Solderless
.187" (4.75mm) x .020" (.51mm) Solderless
.110" (2.79mm) wide with .048" (1.22mm) x .237" (6.02mm) Slot for Soldering

( ) = Momentary Function

B–FORMAT 2002

REVISIONS

PDF FILE MADE

CW INDUSTRIES
Southampton, Pa. 18966

TOLERANCES UNLESS OTHERWISE SPECIFIED

	METRIC
2 Place Decimal ±.010	1 Place Dec. ±.25mm
3 Place Decimal ±.005	2 Place Dec. ±.13mm
Angles ..... ±1°	

Made for: CW IND.
Drawn by: DGW 10–28–2010
Checked by:
Approval:

Title: ROCKER SWITCH ASSEMBLY S.P./D.T.

Division: SWITCH

Dwg. No. GRS-4013A,B,C-XXXX