› em4

em4 remote

em4 remote 2G

- All in one nanoPLC including remote management and remote maintenance with GPRS interface, for use with 2G networks
- Monitor and control remotely your application, from a single installation to a fleet of machine
- Save time in designing your application using the most intuitive graphical function block language of the market
- Measure accurately your high end industrial sensors with the embedded configurable analog inputs (including 4-20 mA)
- Integrate easily one of our three high tech designs in your machine
- Adapt your application along the way of its lifecycle thanks to the enhanced controlling performances

em4 remote - Robust

em4 remote - Glossy black

em4 remote - Glossy white

Specific characteristics			
Part number	88 981 152	88 981 153	88 981 154
Type	B26-2GC		
Inputs	16 digital inputs (including 4 High Speed, 8 analog 0-10 V / potentiometers and 4 analog 0-10 V / 4-20 mA)		
Outputs	10 digital outputs (including 2 solid states 0.5 A PWM, 2 relays 6 A and 6 relays 8 A)		
Supply	24 VDC		
Finish	Robust	Glossy black	Glossy white
On front panel color	Black RAL 9011		White RAL 9003
On terminal block color	Blue RAL 5017		
Protection rating (in accordance with IEC/EN 60529)	IP 50 on front panel IP 20 on terminal block	IP 40 on front panel IP 20 on terminal block	
Weight	Without packing: 350 g With packing: 400 g	Without packing: 345 g With packing: 395 g	
Dimensions	Without packing: 124.6 x 90 x 62.6 mm / 4.91 x 3.54 x 2.46 inch With packing: 148 x 103 x 65 mm / 5.83 x 4.06 x 2.56 inch	Without packing: 124.6 x 90 x 60.4 mm / 4.91 x 3.54 x 2.38 inch With packing: 148 x 103 x 65 mm / 5.83 x 4.06 x 2.56 inch	
R&TTE Directive	1999/5/EC		
Standards of North American type approval	US-Federal Communications Commission (FCC)		
Frequency range GSM 900	880 - 960 MHz		
Frequency range GSM 1800	1710 - 1880 MHz		
Frequency range GSM 850	824 - 894 MHz		
Frequency range GSM 1900	1850 - 1990 MHz		
Antenna: impedance	50 Ω		
Antenna: input power	> 2 W		
Antenna: V.S.W.R	< 2:1 recommended < 3:1 acceptable		
Antenna: return loss	S11 < - 10 dB recommended S11 < - 6 dB acceptable		
Antenna: connector	RP SMA : SMA Female Reverse Polarity		

CROUZET AUTOMATION | em4 REMOTE PLC

General characteristics	
Products certification (in accordance with IEC/EN 60529)	CE, cULus Listed
Conformity with the low voltage directive (in accordance with BT 2006/95/EC)	IEC/EN 61131-2 (Open equipment)
Conformity with the EMC directive (in accordance with 2004/108/EC)	IEC/EN 61000-6-1 (Residential, commercial and light-industrial environments) IEC/EN 61000-6-2 (Industrial) IEC/EN 61000-6-3 (Residential, commercial and light-industrial environments) IEC/EN 61000-6-4 (Industrial)
Earthing	None
Overvoltage category	3 in accordance with IEC/EN 60664-1
Pollution	Degree: 2 in accordance with IEC/EN 61131-2
Maximum utilization altitude	Operation: 2000 m Transport: 3000 m
Mechanical resistance	Immunity to vibrations IEC/EN 60068-2-6, Fc test Immunity to shock IEC/EN 60068-2-27, Ea test
Resistance to electrostatic discharge	Immunity to ESD IEC/EN 61000-4-2, level 3
Resistance to HF interference (Immunity)	Immunity to radiated electrostatic fields IEC/EN 61000-4-3, level 3 Immunity to fast transients (burst immunity) IEC/EN 61000-4-4, level 3 I≥unity to shock waves IEC/EN 61000-4-5 Radio frequency in common mode IEC/EN 61000-4-6, level 3
Conducted and radiated emissions (in accordance with EN 55022/11 group 1)	Class B
Operation temperature	-20°C (-4°F) ➔ +60°C (140°F) (+40°C (104°F) in a non-ventilated enclosure)
Storage temperature	-40°C (-40°F) ➔ +80°C (176°F)
Relative humidity	95% max. (no condensation or dripping water)
Screw terminals connection capacity	Flexible wire with ferrule: 1 conductor: 0.2 to 2.5 mm² (AWG 24-14) Flexible wire with ferrule: 2 conductors: 0.2 to 0.75 mm² (AWG 24-18) Rigid wire: 1 conductor: 0.2 to 2.5 mm² (AWG 24-14) Rigid wire: 2 conductors: 0.2 to 0.75 mm² (AWG 24-18) Tightening torque: 0.5 N.m (4.5 lb-in) (tighten using screwdriver diam. 3.5 mm) Stripping length: 6 mm

Processing characteristics	
LCD display	Display with 4 lines of 18 characters
Programming method	FBD (Function Block Diagram), including SFC (Sequential Function Chart, Grafcet)
Program size	Function blocks: typically 1000 blocks Macro blocks: 64 max. (256 blocks per macro)
Program memory	Flash
Removable memory	N.A
Data memory	2 k octets
Backup time (in the event of power failure)	Program and settings in the controller: 10 years Data memory: 10 years
Data backup	Data backup in the flash memory is guaranteed if the product is powered on more than 10 seconds
Cycle time	From 2 ms to 90 ms, default value: 10 ms
Clock data retention	10 years (lithium battery) at 25°C (77°F)
Clock drift	Drift < 12 min/year (at 25°C (77°F) 6 s / month (at 25°C (77°F) with user-definable correction of drift). Synchronizable by network
Timer block accuracy	0.5 % +/- 2 cycle time
Start up time on power up	< 3 s base alone, < 1.5 s base + 2 expansions + accessory interface (USB or Modbus RS485)
Self test	Test firmware integrity (checksum memory) Stability of the internal power supply Check the conformity of the em4 device configuration with the configuration in the application program.

Supply	
Nominal voltage	24 VDC (-15% / +20%)
Operating limits	20.4 - 28.8 VDC
Immunity from micro power cuts	⩽ 1 ms (repetition 20 times)
Max. absorbed power	5W @ 24 VDC, 6.5 W @ 28.8 VDC, - 0.3 W backlight OFF
Protection against polarity inversions	Yes

Inputs	
Digital and high speed digital inputs 24 VDC - 4 inputs from I1 to I4	
Input used as digital input	
Input voltage	24 VDC (-15% / +20%)
Input current	1.8 mA @ 20.4 V 2.1 mA @ 24 V 2.5 mA @ 28.8 V
Input impedance	11.6 kΩ
Logic 1 voltage threshold	⩾ 15 VDC
Making current at logic state 1	⩾ 1.3 mA
Logic 0 voltage threshold	⩽ 10 VDC
Release current at logic state 1	⩽ 0.8 mA
Response time	1 to 2 cycle times
Sensor type	Contact or 3-wire PNP
Conforming to IEC/EN 61131-2	Type 1
Input type	Resistive
Isolation between power supply and inputs	None
Isolation between inputs	None
Protection against polarity inversions	Yes
Status indicator	On LCD screen
Cable length	⩽ 100 m
Input used as high speed digital input	
Maximum counting frequency	3 channels encoder (I1, I2, I3): 20 kHz* 2 independent counters (I1, I2) (I3, I4) (Cumul, IND, DIR): 2 channels: 40 kHz*, 4 channels: 20 kHz*, 2 independent counters (I1, I2) (I3, I4) (PH, PH2): 2/4 channels: 20 kHz* 4 independent counters (I1, I2, I3, I4) (Up/Down) : 1 channel: 60 kHz*, 2 channels: 40 kHz*, > 2 channels: 20 kHz* * with a time cycle ⩽ 10 ms and a ton / toff = 50% +/- 5%, level 0 < 2V and level 1 > 20,4V
Other functions	4 chronometers (I1, I2, I3, I4) 4 tachometers (I1, I2, I3, I4)
Cable length	⩽ 3 m with shielded twisted cable
Digital 24 VDC and analog inputs 12 bits / 28.8 V - potentiometer - 8 inputs from I5 to IC	
Input used as digital input	
Input voltage	24 VDC (-15% / +20%)
Input current	1.8 mA @ 20.4 V 2.1 mA @ 24 V 2.5 mA @ 28.8 V
Input impedance	11.6 kΩ
Logic 1 voltage threshold	⩾ 11 VDC
Making current at logic state 1	⩾ 1 mA
Logic 0 voltage threshold	⩽ 9 VDC
Release current at logic state 1	⩽ 0.7 mA
Response time	1 to 2 cycle times
Sensor type	Contact or 3-wire PNP
Conforming to IEC/EN 61131-2	Type 1
Input type	Resistive
Isolation between power supply and inputs	None
Isolation between inputs	None
Protection against polarity inversions	Yes
Status indicator	On LCD screen
Cable length	⩽ 100 m

Input used as analog input	
Measuring range	0 ➔ 10 V or 0 ➔ V power supply
Input impedance	11.6 kΩ
Maximum value without destruction	28.8 VDC max
Input type	Common mode
Resolution	12 bit at maximum input voltage (10.5 bit at 10V)
Value of LSB	7.03 mV
Conversion time	Controller cycle time
Maximum error in 0-10V mode	+/- 1.1 % of full scale at 25°C (77°F) +/- 1.6 % of full scale at 55°C (131°F)
Maximum error in 0-V power supply mode	+/- 2 % of full scale at 25°C (77°F) +/- 3 % of full scale at 55°C (131°F)
Repeat accuracy at 55°C (131°F)	+/- 0.5 %
Isolation between analog channel and power supply	None
Protection against polarity inversions	Yes
Potentiometer control	2.2 kΩ / 0.5 W (recommended), 10 KΩ max.
Cable length	⩽ 10 m with shielded twisted cable (sensor not isolated)
Digital 24 VDC and analog inputs 12 bits / 10 V & 11 bits / 0-20 mA- potentiometer - 4 inputs from ID to IG	
Input used as digital input (power off state)	
Input voltage	24 VDC (-15% / +20%)
Input current	1.5 mA @ 20.4 V 1.7 mA @ 24 V 2.1 mA @ 28.8 V
Input impedance	13.9 kΩ
Logic 1 voltage threshold	⩾ 11 VDC
Making current at logic state 1	⩾ 0.8 mA
Logic 0 voltage threshold	⩽ 8 VDC
Release current at logic state 1	⩽ 0.5 mA
Response time	1 to 2 cycle times
Sensor type	Contact or 3-wire PNP
Conforming to IEC/EN 61131-2	Type 1
Input type	Resistive
Isolation between power supply and inputs	None
Isolation between inputs	None
Protection against polarity inversions	No
Status indicator	On LCD screen
Cable length	⩽ 100 m
Input used as 0-10 V analog input	
Measuring range	0 ➔ 10 V
Input impedance	13.9 kΩ
Maximum value without destruction	28.8 VDC max
Input type	Common mode
Resolution	12 bit / 10V
Value of LSB	2.45 mV
Conversion time	Controller cycle time
Maximum error at 25°C (77°F)	+/- 0.8 % of full scale
Maximum error at 55°C (131°F)	+/- 1.2 % of full scale
Repeat accuracy at 55°C (131°F)	+/- 0.5 %
Isolation between analog channel and power supply	None
Protection against polarity inversions	Yes for voltage ⩽ 10 V
Potentiometer control	2.2 kΩ / 0.5 W (recommended), 10 KΩ max.
Cable length	⩽ 10 m with shielded twisted cable (sensor not isolated)

Input used as 0-20 mA analog input	
Measuring range	0 ➔ 20 mA (4 ➔ 20 mA by the application)
Input impedance	245 Ω
Maximum value without destruction	30 mA max
Input type	Common mode
Resolution	11 bit (normalized at 0 - 2000) / 20 mA
Value of LSB	10 µA
Conversion time	Controller cycle time
Maximum error at 25°C (77°F)	+/- 1.2 % of full scale
Maximum error at 55°C (131°F)	+/- 1.7 % of full scale
Repeat accuracy at 55°C (131°F)	+/- 0.5 %
Isolation between analog channel and power supply	None
Protection against polarity inversions	Yes
Overvoltage protection	Yes If the input voltage is > 7 V, this one is automatically switched on 0-10V configuration.
Cable length	≤ 30 m with shielded twisted cable (sensor not isolated)

Outputs

Digital / PWM solid state output - 2 solid state outputs from O1 to O2

Output used as digital output	
Breaking voltage	10 ➔ 28.8 VDC
Nominal voltage	12 / 24 VDC
Nominal current	0.5 A on resistive load @ 25°C (77°F)
Max. breaking current	0.625 A
Non repetitive overload current	1 A
Maximum breaking current in the common	1 A
Voltage drop	< 1 V for I = 0.5 A
Response time	Make = 1 cycle time + 30 µs typical Release = 1 cycle time + 40 µs typical
Built-in protections	Against overloads and short-circuits: Yes Against over voltages (*): Yes Against inversions of power supply: Yes (*) In the absence of a potential free contact between the output of the programmable logic controller and the load
Minimum load	1 mA
Galvanic isolation	No
Cable length	≤ 10 m

Truth table of the default

	Command	Output	Fault
Normal condition	0	0	No
	1	1	No
Overheating	0	0	No
	1	0	Yes
Underpowered	0	0	X
	1	0	X
Short circuit (current limit)	0	0	No
	1	0	Yes

Output used as PWM output	
PWM frequency	14.11 Hz ; 56.45 Hz ; 112.90 Hz ; 225.80 Hz ; 451.59 Hz ; 1758.24 Hz
PWM cyclic ratio	0 ➔ 100 % 100 steps
PWM Max. error	≤ 2 % (from 10 % ➔ 90 %)
Status indicator	On LCD screen
Cable length	≤ 10 m with shielded twisted cable
Distance between the power source and the static outputs	≤ 30 m

6 A relay output - 2 outputs from O3 to O4	
Breaking voltage	250 VAC max
Breaking current	6 A
Maximum breaking current in the common	IEC @ 25°C (77°F): 12 A IEC @ 60°C (140°F) or UL: 10 A
Mechanical life	5 000 000 operations (cycles)
Electrical durability for 50 000 operating cycles	24 VDC tau = 0 ms: 6 A, tau = 7 ms: 3 A, tau = 15 ms: 1.8 A Usage category DC-12: 24 V, 6 A Usage category DC-14: 24 V, 1.8 A 250 VAC cos phi = 1: 6 A, cos phi = 0.7: 5 A, cos phi = 0.4: 2.5 A Usage category AC-12: 250 V, 6 A Usage category AC-13: 250 V, 5 A Usage category AC-15: 250 V, 2 A
Minimum switching capacity	100 mA (at minimum voltage of 12 V)
Maximum operating rate	Off load: 10 Hz At operating current: 0.1 Hz
Voltage for withstanding shocks	In accordance with IEC/EN 60947-1 and IEC/EN 60664-1: 4 kV
Response time	Make = 8 ms max Release = 4 ms max
Built-in protections	Against short-circuits: None Against over voltages and overload: None
Status indicator	On LCD screen
Cable length	⩽ 30 m
8 A relay output - 6 outputs from O5 to OA	
Breaking voltage	250 VAC max
Breaking current	8 A, ⩾ 55°C: 6 A
Maximum breaking current in the common	IEC @ 25°C (77°F): C3, C6: 8 A ; C4, C5: 16 A IEC @ 60°C (140°F) or UL: C3, C6: 8 A ; C4, C5: 10 A
Mechanical life	20 000 000 operations (cycles)
Electrical durability for 50 000 operating cycles	24 VDC tau = 0 ms: 8 A, tau = 7 ms: 3 A, tau = 15 ms: 1.5 A Usage category DC-12: 24 V, 8 A Usage category DC-14: 24 V, 1.5 A 250 VAC cos phi = 1: 8 A, cos phi = 0.7: 4.75 A, cos phi = 0.4: 3 A Usage category AC-12: 250 V, 8 A Usage category AC-13: 250 V, 4.3 A Usage category AC-15: 250 V, 1.5 A
Minimum switching capacity	100 mA (at minimum voltage of 12 V)
Maximum operating rate	Off load: 10 Hz At operating current: 0.1 Hz
Voltage for withstanding shocks	In accordance with IEC/EN 60947-1 and IEC/EN 60664-1: 4 kV
Response time	Make = 8 ms max Release = 4 ms max
Built-in protections	Against short-circuits: None Against over voltages and overload: None
Status indicator	On LCD screen
Cable length	⩽ 30 m

Diagrams

Dimensions

B26 2GC Robust

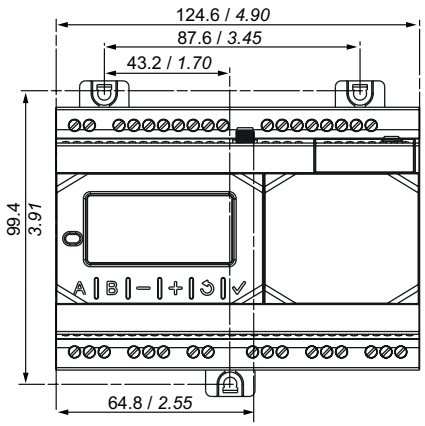

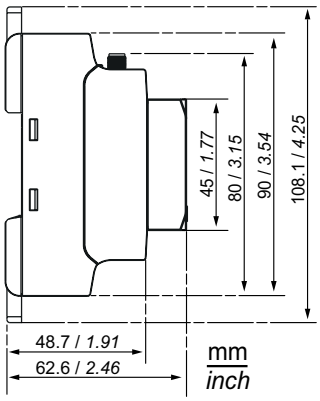

B26 2GC Glossy

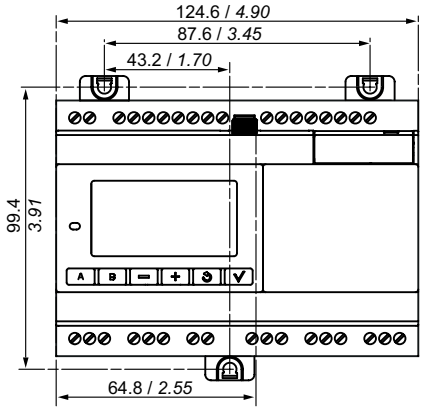

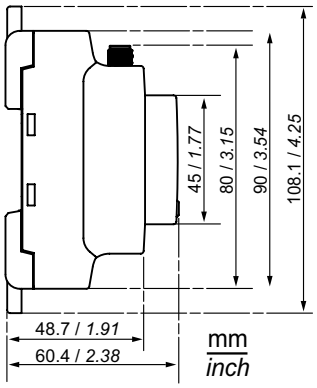

Connections

Inputs

I1 ... IG 0/1

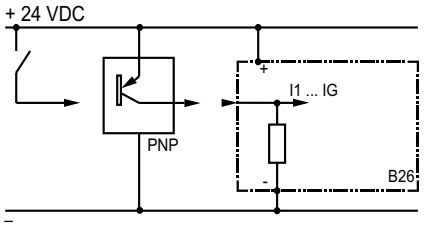

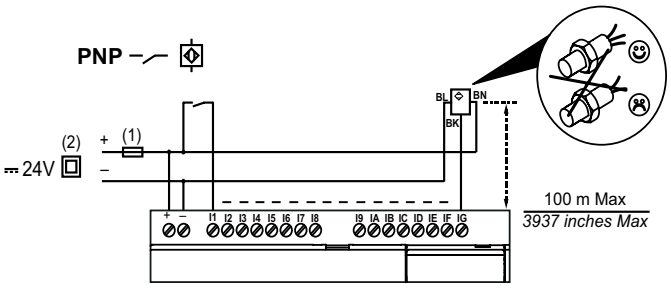

I5 ... IC U

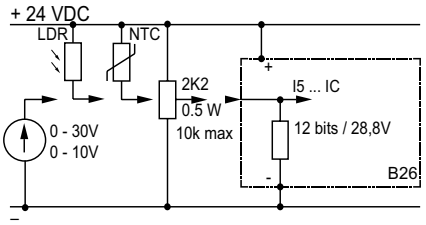

30 V, NTC, LDR,

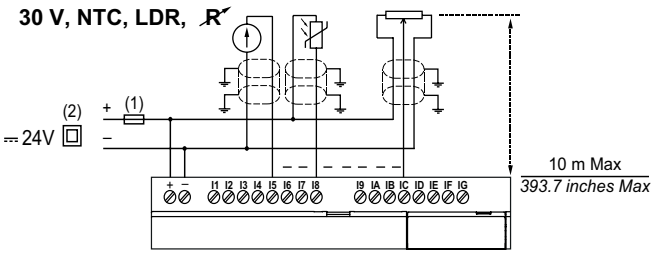

ID ... IG U / I

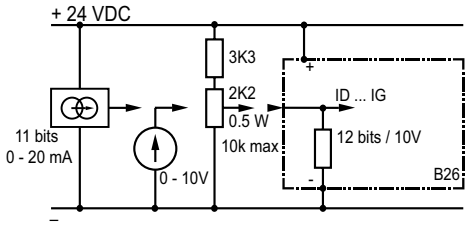

20 mA, 10 V,

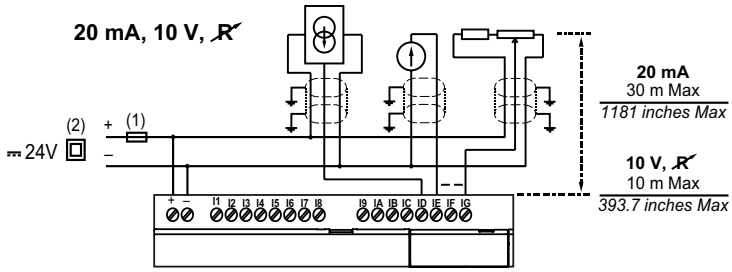

I1 ... I4 2604

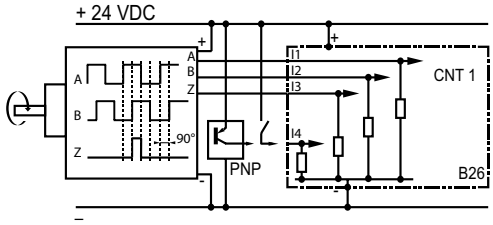

Hz

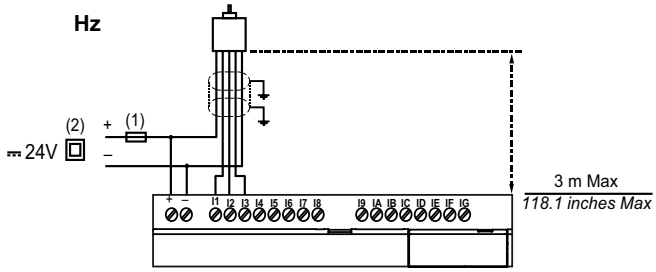

I1 ... I4 2604

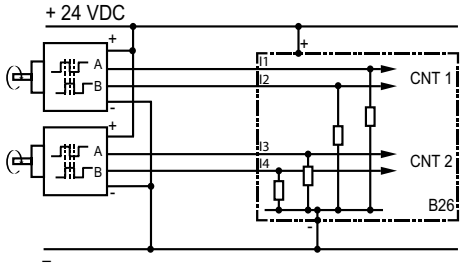

Hz

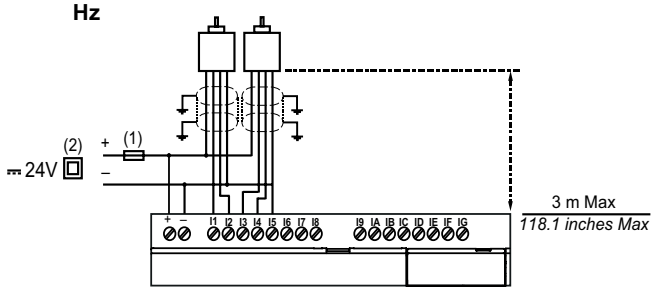

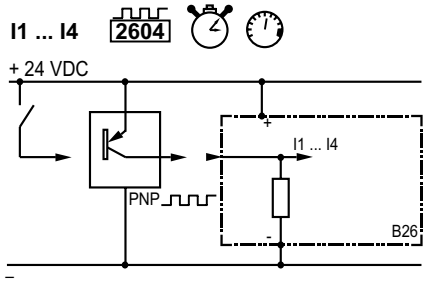

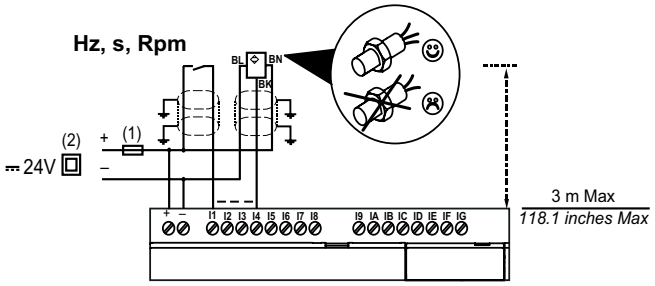

(1) 1 A (UL248) quick-blowing fuse, circuit-breaker or circuit protector (US)

(2) Isolating source

Outputs

O1 & O2

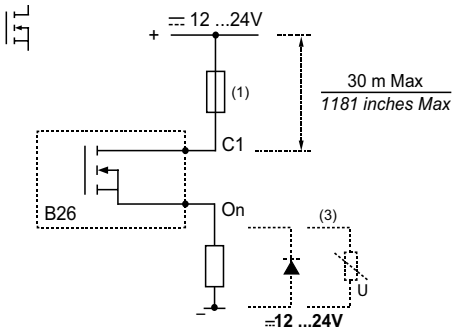

0,5 A

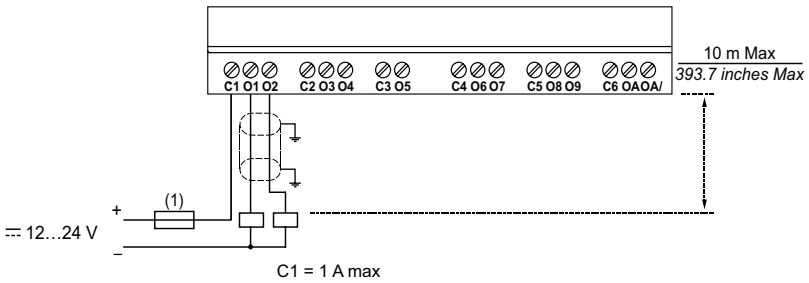

O3 ... OA

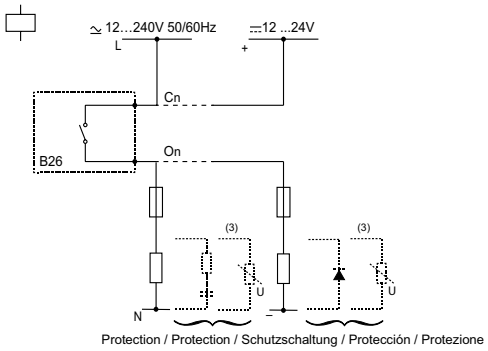

6 A, 8 A

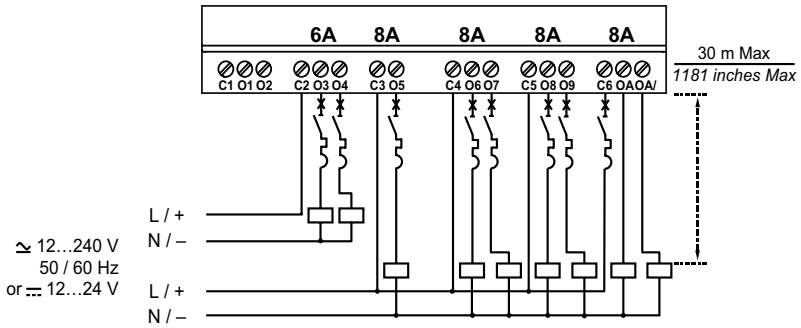

C2 = 12 A max
C4, C5 = 16 A max
C3 ... C6 : Same polarity

C3 = 8 A max
C6 = 8 A max

(3) Inductive load

I/O installations

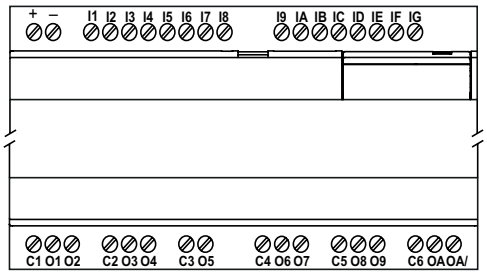

Type	Description	Part number
B26 2GC Glossy black	• The em4 remote nano-PLC • The first year of subscription to em4 remote access (em4 web and em4 app)	88981153
B26 2GC Glossy white		88981154
B26 2GC Robust		88981152
B26 2GC Starter kit glossy black	Starter kit including: • The em4 remote nano-PLC • The first year of subscription to em4 remote access (em4 web and em4 app) including a SIM card with one year subscription and data plan • The standard 3 m wireless antenna (code 88980160) • em4 soft (USB stick) (code 88980170) • USB interface black (code 88980110) or white (code 88980111) in accordance with the nano-PLC) • USB programming cable PC -> em4 (code 88980170)	88981156
B26 2GC Starter kit glossy white		88981157
B26 2GC Starter kit robust		88981155
B26 2GC Evaluation case glossy black	Ready to use evaluation case including: • The starter kit (description above) • Power supply 110-230 VAC with Europe and US adaptor • Simulator PCB for the 16 Inputs with switches, potentiometers and terminals to connect your sensor for evaluation (code 88980151) • Simulator PCB for the 10 Outputs with 10 LEDs and terminals to connect the 2 static outputs to a device for evaluation (code 88980152)	88981185