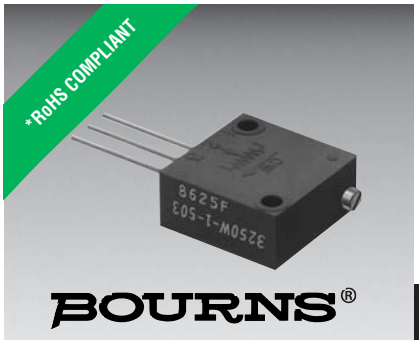

Features

- Multiturn / Wirewound / Sealed
- Listed on the QPL for style RT22 per MIL-R-27208 and RTR22 per High-Rel MIL-R-39015
- Panel mount option available
- RoHS compliant*

3250 - 1/2 ” Square Trimming Potentiometer

Electrical Characteristics

Standard Resistance Range
..... 10 to 50K ohms
(see standard resistance table)
Resistance Tolerance ..... ±5 % std.
(tighter tolerance available)
Absolute Minimum Resistance
..... 0.1 % or 1 ohm max.
(whichever is greater)
Noise ..... 100 ohms ENR max.
Resolution ..... See Resistance Table
Insulation Resistance ..... 500 vdc.
1,000 megohms min.
Dielectric Strength
Sea Level..... 1,000 vac
80,000 Feet ..... 400 vac
Adjustment Travel..... 25 turns nom.

Environmental Characteristics

Power Rating @ 85 °C ..... 1.0 watt
Power Rating @ 150 °C ..... 0 watt
Temperature Range ... -65 °C to +150 °C
Temperature Coefficient ..... ±50 ppm/°C
Seal Test ..... 85 °C Fluorinert†
(pin styles only)
Humidity ..... MIL-STD-202 Method 106
(2 % ΔTR; 100 Megohms IR)
Vibration ..... 30 G
(1 % ΔTR; 0.5 % + resolution ΔVR)
Shock ..... 100 G
(1 % ΔTR; 0.5 % + resolution ΔVR)
Load Life
..... 1,000 hours 1.0 watt @ 85 °C
(2 % ΔTR; 500 ohms ENR)
Rotational Life ..... 200 cycles
(2 % ΔTR; 500 ohms ENR)

Physical Characteristics

Torque..... 5.0 oz-in. max.
Mechanical Stops..... Wiper idles
Terminals .. Solderable printed circuit pins
Flexible leads (7 strands of 30 AWG)
Weight ..... 0.06 oz.
Machine Screw Mounting
Torque ..... 12 oz-in. max.
Marking..... Manufacturer’s trademark, resistance code, terminal numbers, date code, manufacturer’s model number and style
Wiper ..... 50 % (Actual TR) ±10 %
Flammability ..... U.L. 94V-0
Standard Packaging
P&W Styles ..... 25 pcs. per tube
L Style ..... 25 pcs. per bag
Adjustment Tool..... H-90

Product Dimensions

3250P
Common Dimensions
(Pin Styles)

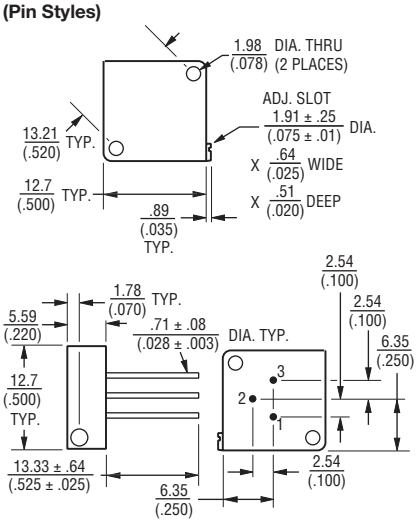

3250W

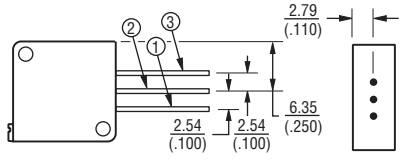

3250W-66

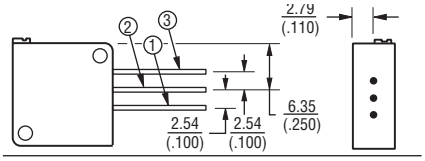

3250L

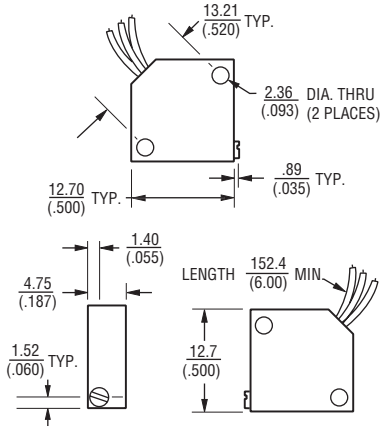

How To Order

3250 L - 1 - 103 M

Model
Style
Standard or Modified Product Indicator
-1 = Standard Product
Resistance Code
Optional Suffix Letter
M = Panel Mount (Factory Installed)

Consult factory for other available options.

Standard Resistance Table

Resistance (Ohms)	Resistance Code	Nominal Resolution (Percent)
10	100	1.30
20	200	1.00
50	500	0.80
100	**101**	**0.90**
200	**201**	**0.70**
500	**501**	**0.60**
1,000	**102**	**0.40**
2,000	**202**	**0.30**
5,000	**502**	**0.25**
10,000	**103**	**0.19**
20,000	**203**	**0.16**
25,000	253	0.14
50,000	503	0.13

Popular values listed in boldface. Special resistances available.

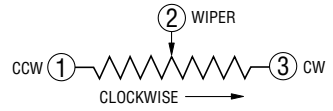

DIMENSIONS: MM (INCHES)

TOLERANCES: ± 0.25 (.010) EXCEPT WHERE NOTED

REV. 03/09

*RoHS Directive 2002/95/EC Jan 27 2003 including Annex.
†“Fluorinert” is a registered trademark of 3M Co.
Specifications are subject to change without notice.
Customers should verify actual device performance in their specific applications