P/N	WIRE NUMBERS LOADED	PLATING
94152-088 94152-088LF	ALL	30 υ" G.X.T.
94152-188LF	ALL	6 υ" GOLD

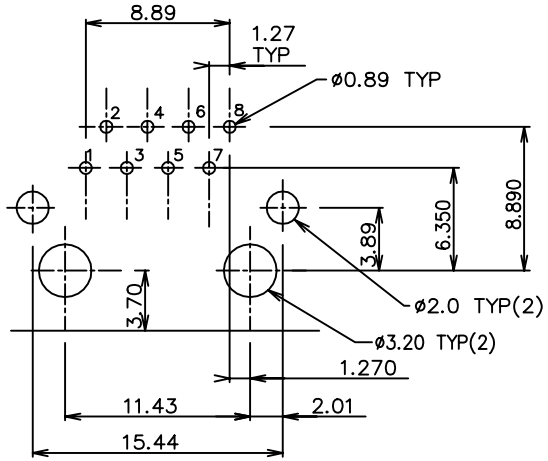

RECOMMENDED PC BOARD LAYOUT

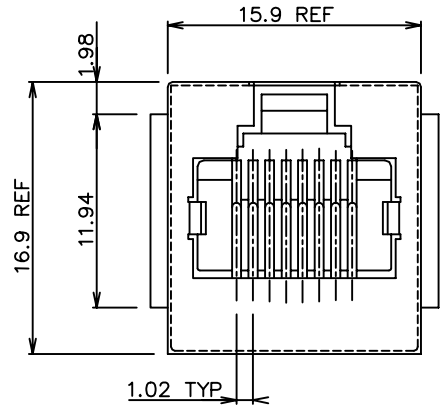

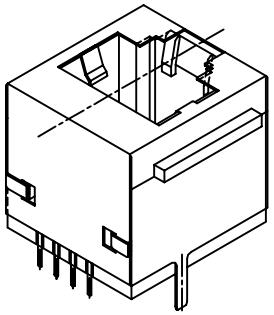

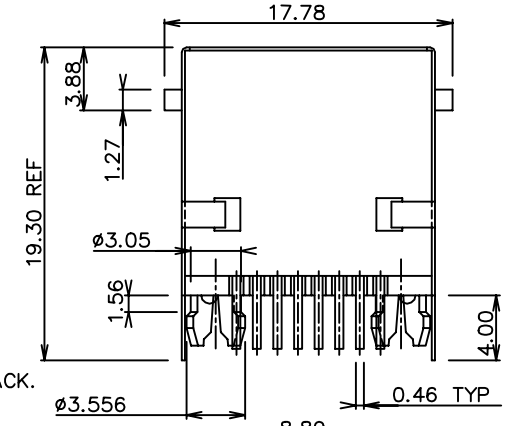

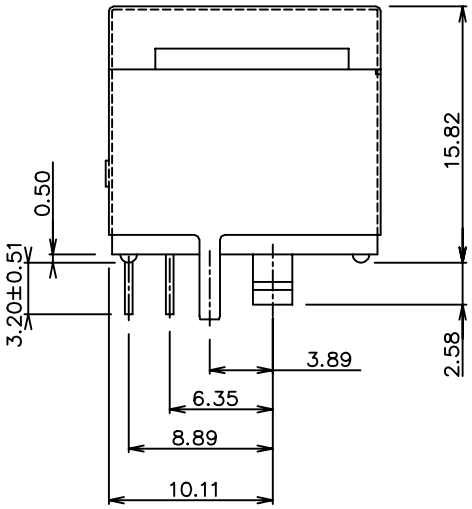

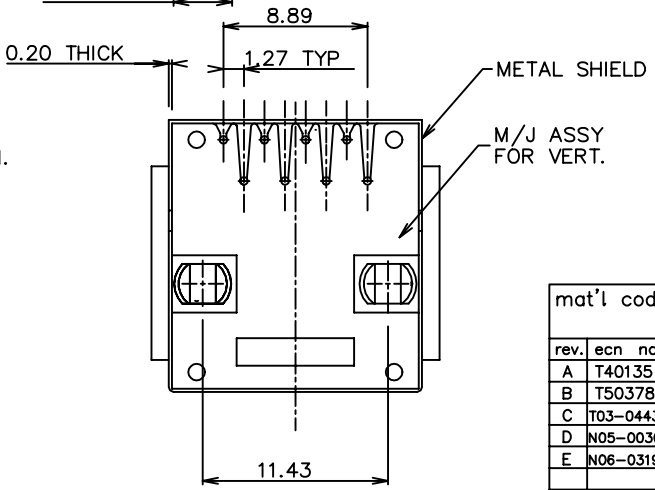

NOTES:

1. RECOMMENDED P.C.B THICKNESS 1.60 MM
2. HOUSING MAT'L: NYLON 66, 25% G.F UL 94V-0, BLACK.
3. CONTACTS: PHOS BRONZE ALLOY UNS-C51000,
   ø 0.460 ROUND WIRE, PLATING SEE TABLE.
4. METAL SHELL MATERIAL:
   COPPER ALLOY. 0.20mm THICK
   FINISH:
   FOR 94152-XXX TIN-LEAD 100u" THICK MIN.
   FOR 94152-XXXLF PURE TIN 80u" THICK MIN.
5. PACKAGING: GES-14-351, USE TRAY
6. ALL DIMENSIONS IN MILIIMETER.
7. IF LF P/N THE PRODUCT MEETS EUROPEAN UNION DIRECTIVES AND OTHER COUNTRY REGULATIONS AS DESCRIBED IN GS-22-008.
8. THE HOUSING WILL WITHSTAND EXPOSURE TO 260°C PEAK TEMPERATURE FOR 10 SECONDS IN A WAVE SOLDER APPLICATION WITH A 1.60mm MINIMUM THICK CIRCUIT BOARD.
9. IF LF P/N PACKAGING MEETS GS-14-920 SPECIFICATION.

rev.	ecn no.	dr	date
A	T40135		05/19/94
B	T50378	C L	12/18/95
C	T03-0443	WL	10/06/03
D	N05-0030	YS	02/05/05
E	N06-0319	WG	12/28/06

mat'l code

tolerance unless otherwise specified: linear .0 ± 0.25, .00 ± 0.13, .000± 0.05; angles ± 2°

dr	KCHOU	09/16/93
engr	TONY CHIEN	09/16/93
chr	TONY CHIEN	09/16/93
appd	JENN TSAO	09/16/93

CUSTOMER COPY

projection

unit mm/inch

scale 3/1

FCI www.fciconnect.com

title: 8 POS VERT P.C.B. M/J ASSY SHIELDED

product family

size A3 | dwg no. 94152 | code TWN | sheet 1 OF 1

sheet index	revision sheet	E 1

Tous droits strictement reserves. Reproduction ou communication a des tiers int sous quelque forme que ce soit sans autorisation ecrite du propietaire. Propriete de c FCI. Droits de reproduction FCI bv

All rights strictly reserved. Reproduction or issue to third parties in any for whatever is not permitted without written authority from the proprietor. Property of c FCI. Copyright FCI bv

PDM:Rev:E STATUS:Released Printed: Aug 01, 2010